MONTREUX

Saitek™

RT17B

DOC. NO. : RT17B-PG-012
REV. : 0
DATE : 5 Oct., 95

GENERAL PRODUCT SPECIFICATIONS FOR MONTREUX

A. Adapter requirement : DC 5.6±0.1V Regulated.

B. Current consumption :

a) Normal mode at adapter = 5.6V
300mA typical
500mA max.

b) Memory mode at battery terminal = 3.0V
3μA typical
6μA max.

C. Power consumption : 2.8W typical
5.6W max

D. System clock frequency : 28.322MHz ±1% (adapter = 5.6V)

E. Real time clock frequency : 32768Hz ±0.1% (adapter = 5.6V)

PREPARED BY : Daniel Fong

APPROVED BY :

DIST : BDM, QAM, SEE, SEA, IEM

Filename : /BDD1/RT17B-PS.Doc

ORIGINAL

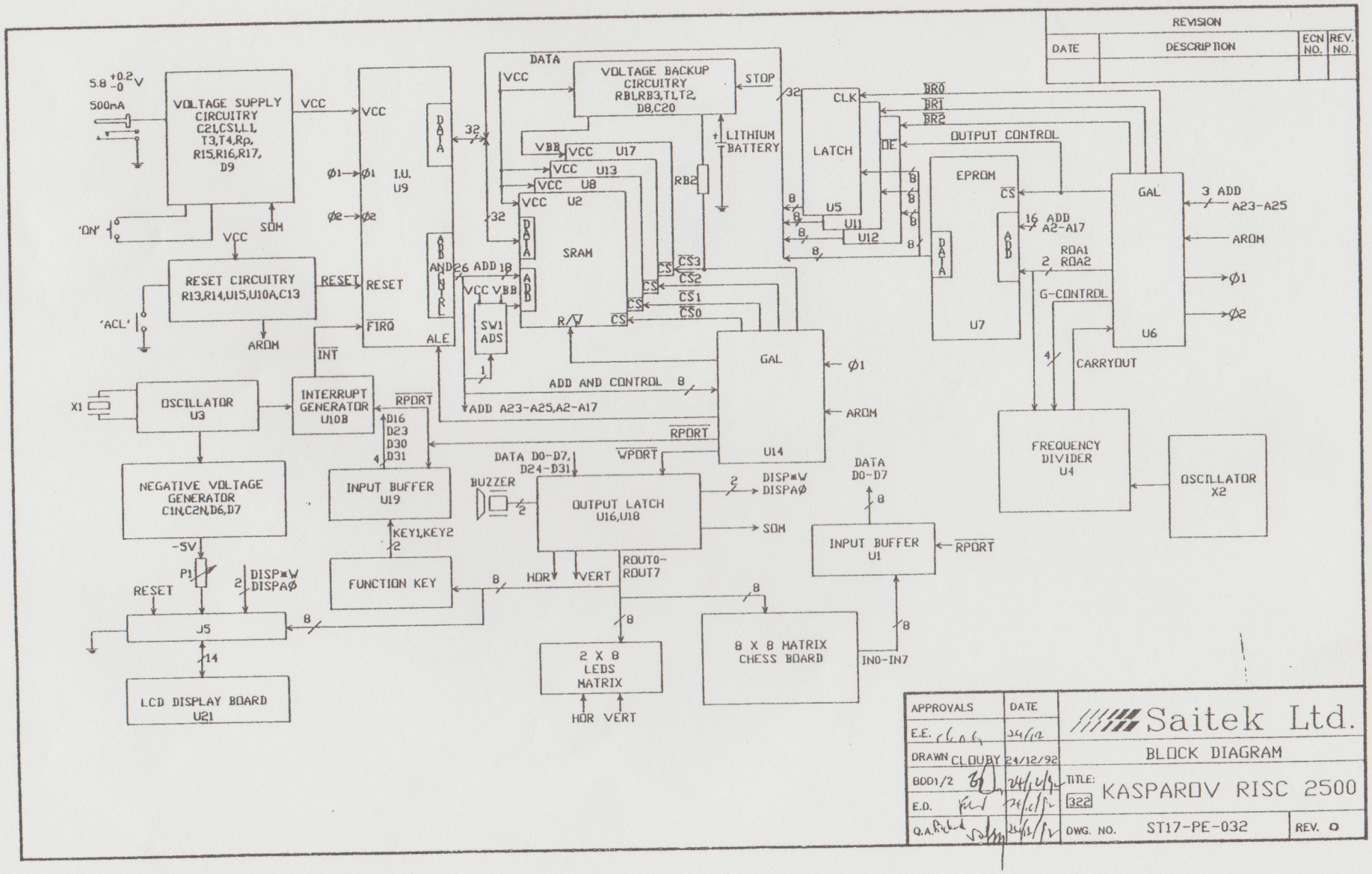

RT17B P 2/7

Doc No. : RT17B-PS-011
Rev. : 0
Date : 5 Oct., 1995

MONTREUX ADJUSTMENT PROCEDURE

I. Object : To adjust system clock frequency.

Equipment needed : Frequency counter or Oscilloscope capable of frequency measurement up to 30MHz.

Procedure :

1. Disassemble unit by removing screws (6) on bottom cover.
2. Power on unit (Adapter = 5.6V)
3. Place probe of counter/scope at pin 1 of X2.
   If frequency measured is out of specified range (28.04-28.60MHz or the crystal marked value +/-1%), replace X2 until counter/scope reading is within specification.
4. Reassemble unit.

II. Object : To adjust real time clock frequency.

Equipment needed : Frequency counter or Oscilloscope capable of frequency measurement up to 1MHz.

Procedure :

1. Disassemble unit by removing screws (6) on bottom cover.
2. Power on unit (Adapter = 5.6V)
3. Place probe of counter/scope at pin 11 of U3.
   If frequency measured is out of specified range (32736-32800Hz, replace CX1 or X1 until counter/scope reading is within specification.
4. Reassemble unit.

Prepared by : Daniel
Daniel Fong

Approved by :

Dist : QAM/SEE, SEA

Filename : /BDD1/RT17B-PS.Doc

a 3

Montreux Trouble Shooting Chart

SYMPTOMS		POSSIBLE CAUSES
Unit does not function	1.	Check if only adapter provided by Saitek for the Montreux is used.
	2.	Check if adapter output voltage is between 5.5-5.7V.
	3.	Check voltage supply to all I.C. (except U17) is 5.3±0.3V.
	4.	Check voltage at U17 is 5.1±0.3V.
	5.	Check if jumper setting is correct.
	6.	Look for no broken wire connections.
	7.	Check if X2 is oscillating at 28.322MHz±1%.
	8.	Check if X1 is oscillating at 32768Hz±0.1%.
	9.	Check if 'ACL' switch (SW1) is not short to GND.
	10.	Check if all the I.C. are functionally good.
LCD malfunction	1.	Look for no broken wire connections.
	2.	Check if the negative voltage supply to LCD driver chip is between -3.6 to -5.3Volt.
	3.	Check if heat seal connector to LCD is intact.
	4.	Check if LCD driver chip is functionally good.
	5.	Check if U18 is functionally good.
Do not retain game	1.	Check for Lithium battery voltage is not lower than 2.7V.
	2.	Check if T1, T2, D8, C20 are functionally good.
	3.	Check if U1 & U17 are functionally good.
	4.	Check if jumper SW1 and ADS setting are correct.
Improper response to chessboard or function key	1.	Check for no dust or oxide on sensor and keys.
	2.	Check for no broken wire connection.
	3.	Check if U18, U1, U19 are functionally good.
LED malfunction	1.	Look for broken trace(s) on PCB.
	2.	Look for short circuit on PCB.
	3.	Check if U16 and U18 are functionally good.
No sound	1.	Look for broken wire connection.
	2.	Check if U6 and buzzer are functionally good.
Unit does not turn ON	1.	Check if T3, T4 are functionally good.
	2.	Look for no broken wire connection.
Unit does not turn OFF	1.	Check if STOP switch is functionally good.
	2.	Check if U16 is functionally good.

Dist : BDM, QAM

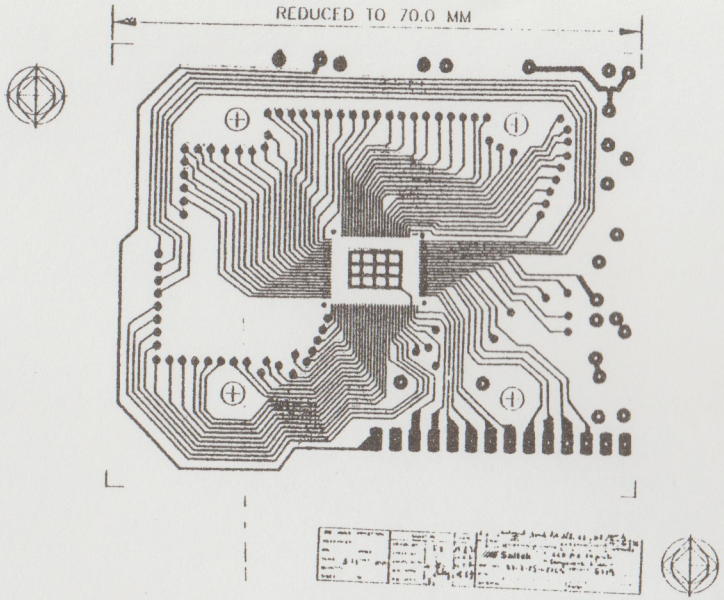
REDUCED TO 70.0 MM
Saltek

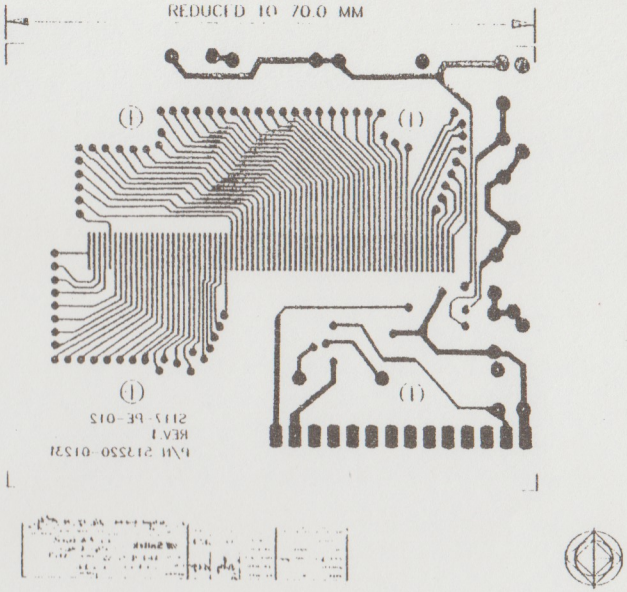
REDUCED TO 70.0 MM
S112-PE-012
REV.1
P/N S13220-0121

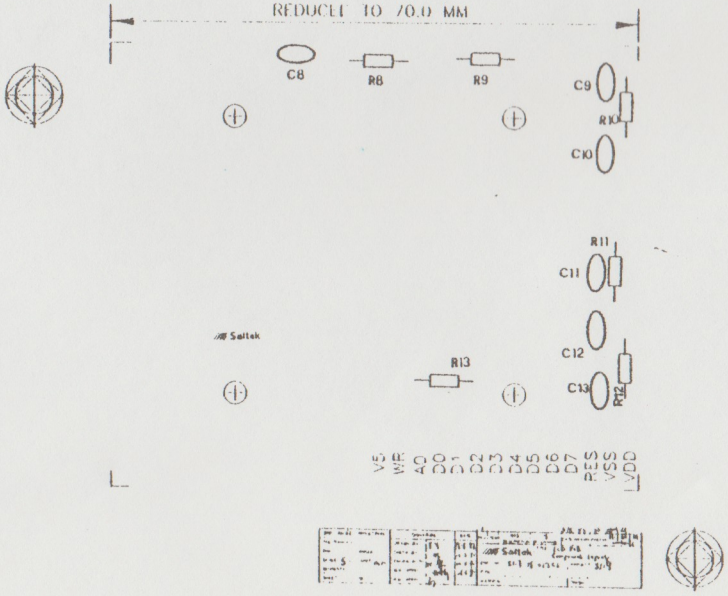
REDUCED TO 70.0 MM
C8
R8
R9
C9
R10
C10
R11
C11
C12
R12
C13
R13
Saltek
VDD
VSS
A15
D7
D6
D5
D4
D3
D2
D1
D0
A0
WE
VS

RT 17B p.5/5

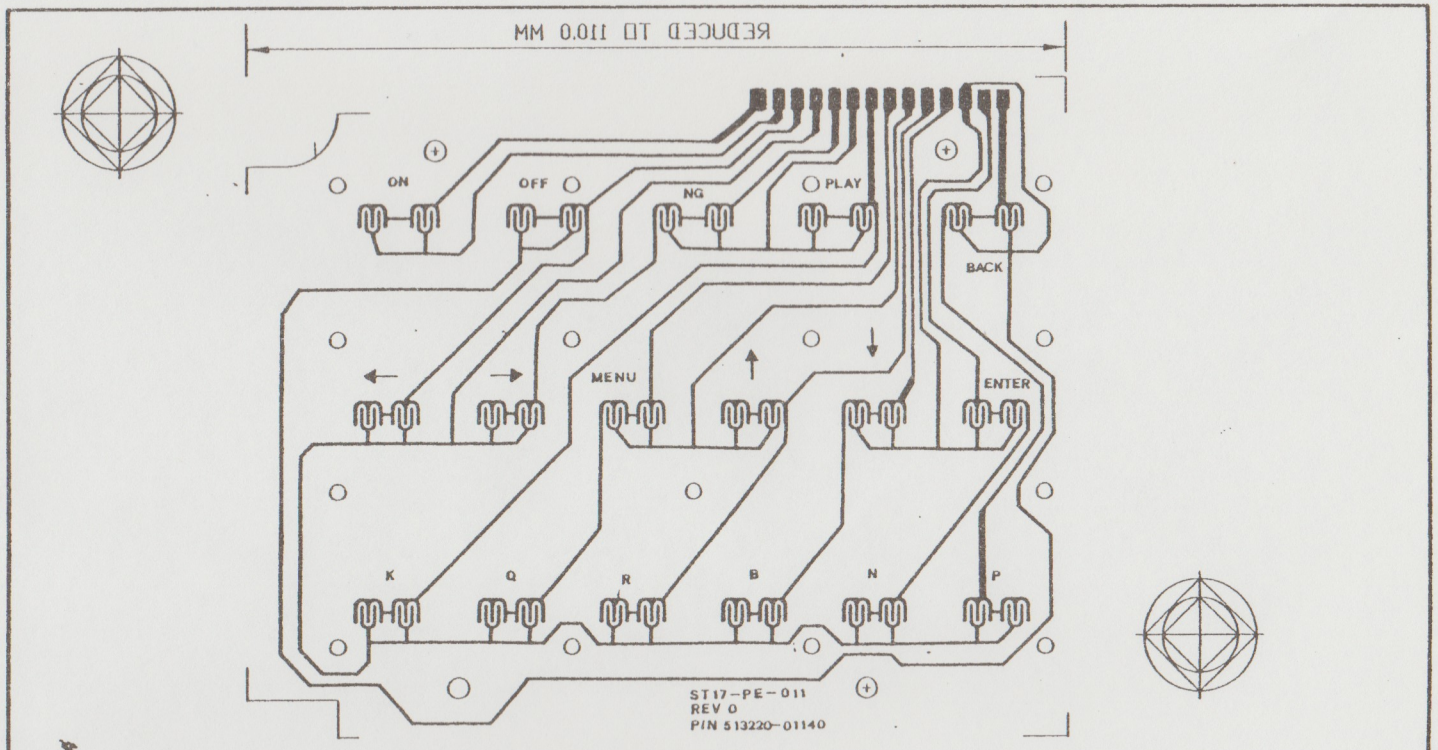

3RD ANGLE PROJECTION	SIGNATURE		DATE
TOLERANCES	DRAWN BY:	TY	14-5-92
DIM. : ANGLE:	CHECK BY:	BL	22-5-92
SCALE: 2 : 1 UNIT: mm	ENGRG AUTH	PD	22-5-92
QUANTITY :	Q.A. APPD.		27-5-92
SHEET OF	BOD APPD.		

REV	ITEM	WAS	IS	DATE	DRAWN	CHECK	ED	QA	BOD
		DESCRIPTION OF CHANGE					APPROVED		

Saitek

TITLE: Key PCB Layout – Solder Side –

DWG. NO.: ST17-PE-01153 PROJECT: ST17

P/N: 513220-01140

MATERIAL FINISH

RT17B p. 6/7

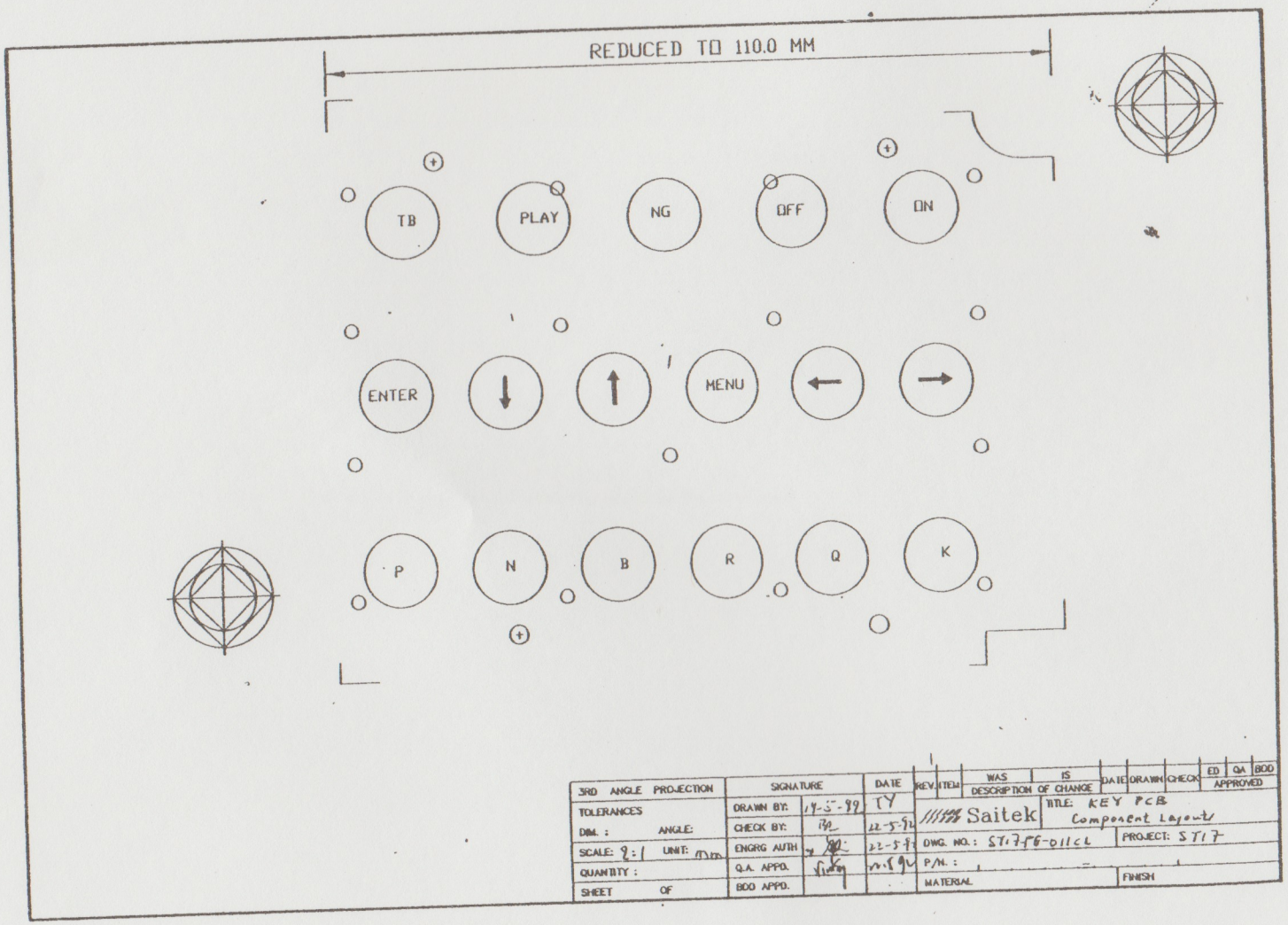

3RD ANGLE PROJECTION	SIGNATURE		DATE
TOLERANCES	DRAWN BY:	14-5-92	TY
DIM. : ANGLE:	CHECK BY:	BR	22-5-92
SCALE: 2:1 UNIT: mm	ENGRG AUTH		22-5-92
QUANTITY :	Q.A. APPD.		22.5.92
SHEET OF	BDO APPD.		

REV.	ITEM	WAS	IS	DATE	DRAWN	CHECK	ED	QA	BDO
		DESCRIPTION OF CHANGE					APPROVED		

Saitek

TITLE: KEY PCB Component Layout

DWG. NO.: ST17-56-01ICL

PROJECT: ST17

P/N. :

MATERIAL

FINISH

RT17B P.7/7

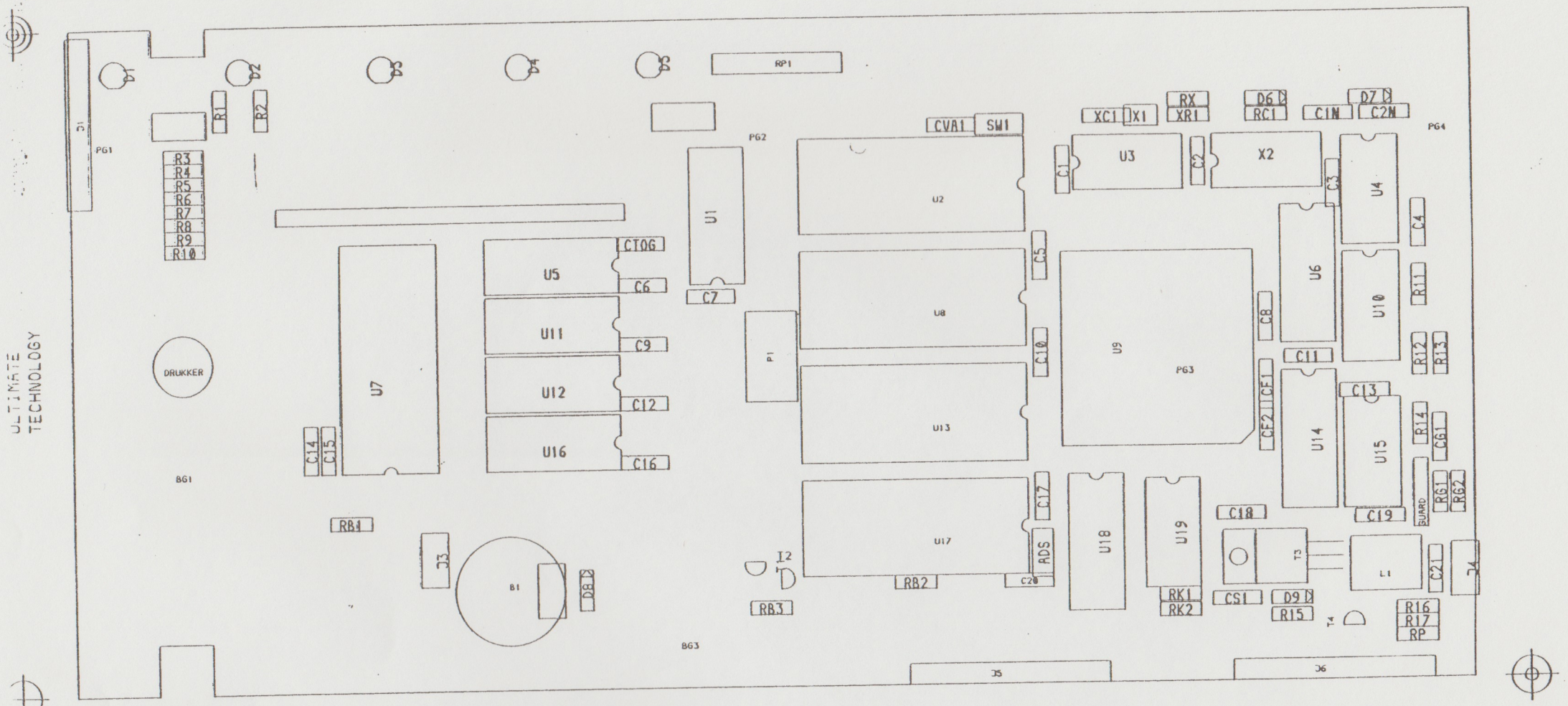

TASC23C.G4 (JUL. 16, 1992) (11:04) (TASC) SCALE: 100%
DRILL REF PNT: 0.635, 123.190 (MM)

RT178 p. 8/9

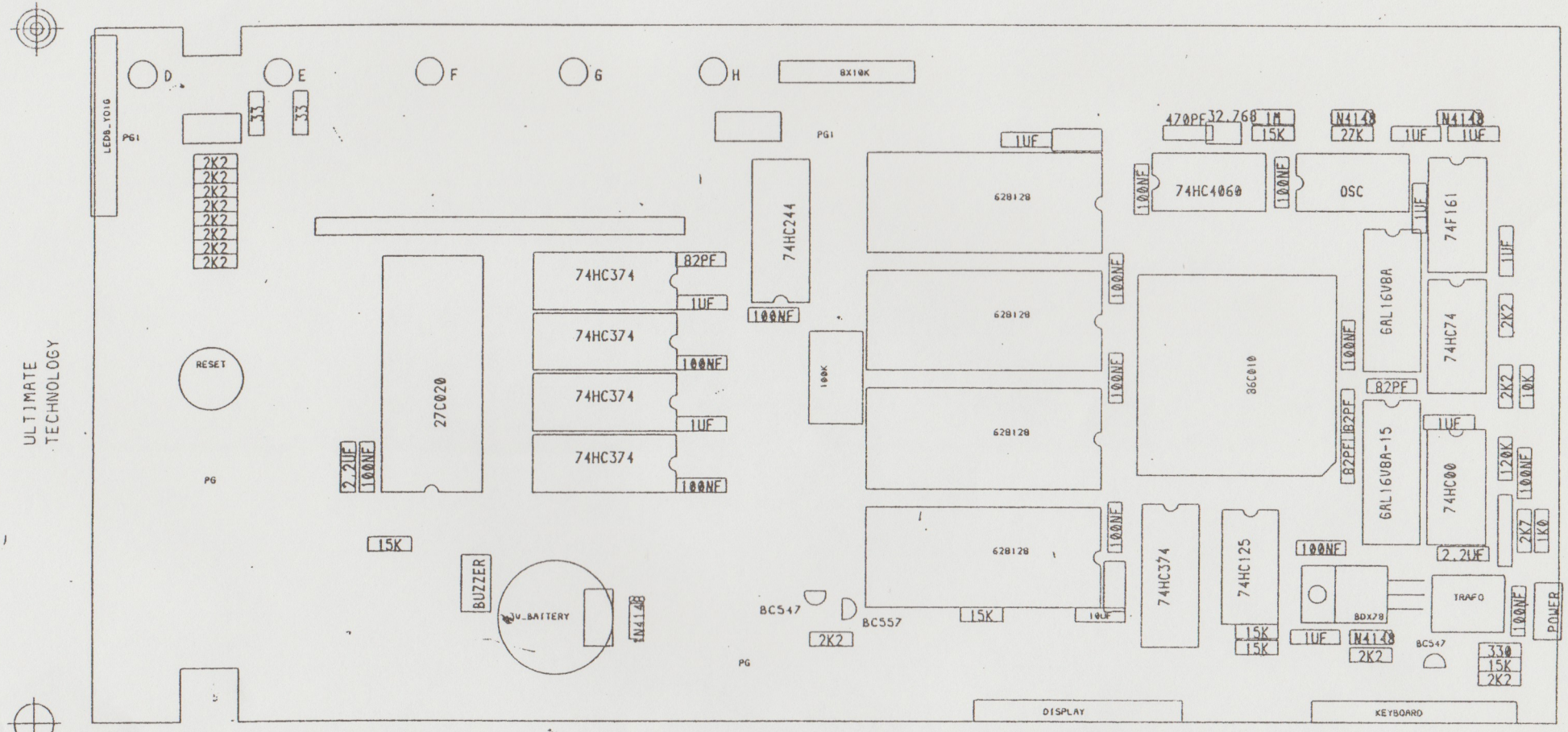

TASC23C.G3 (JUL. 16, 1992) (11:04) (TASC) SCALE: 100%
DRILL REF PNT: 0.635, 123.190 (MM)

RT/7B P. 9/9

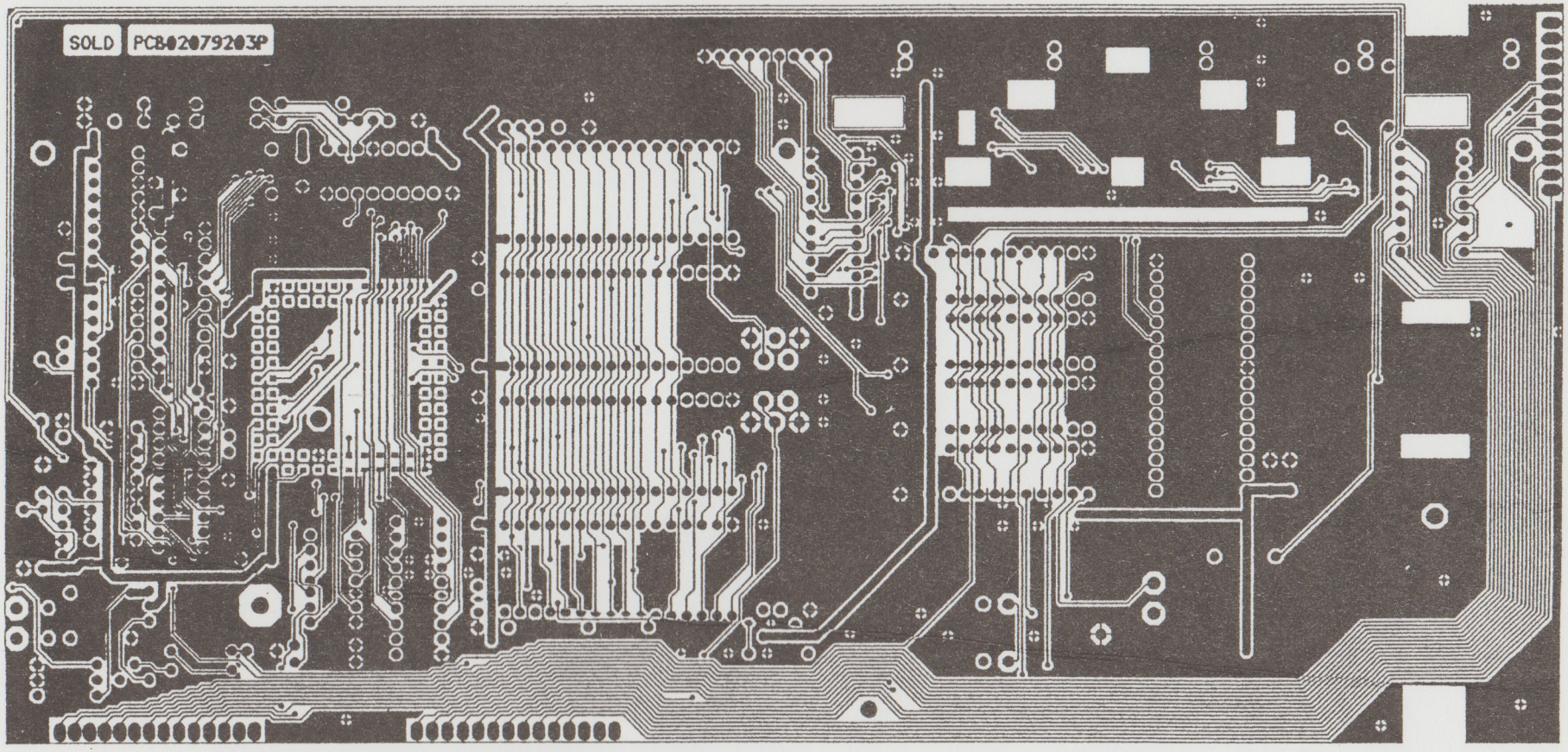

ULTIMATE
TECHNOLOGY

TASC23C.G1 (JUL. 16. 1992) (11:03) (TASC) SCALE: 100% REFLECTED
DRILL REF PNT: 0.635. 123.190 (MM)

RT7B P.6

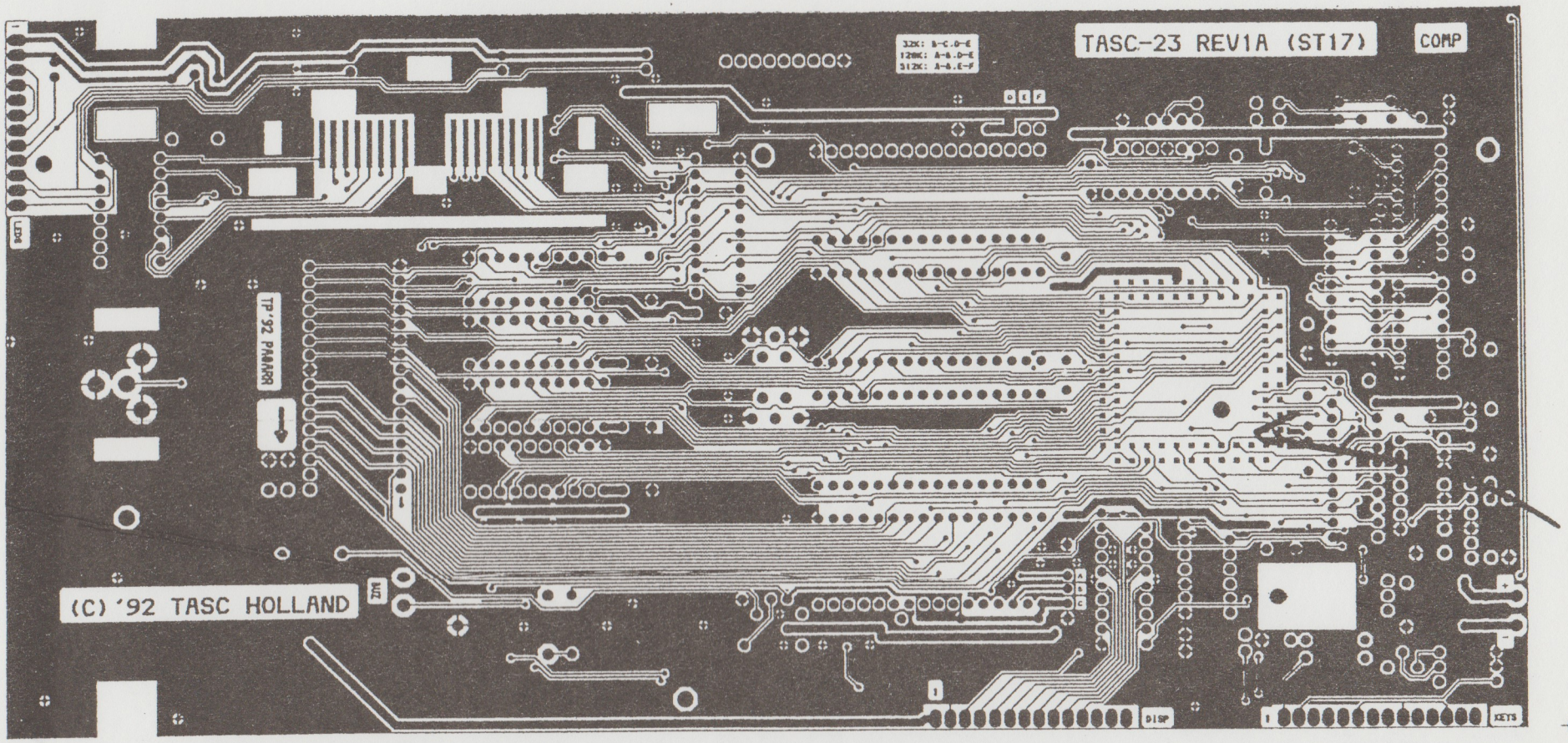

ULTIMATE
TECHNOLOGY

TASC23C.G0 (JUL. 16, 1992) (11:02) (TASC) SCALE: 100%
DRILL REF PNT: 0.000, 0.000 (MM)

RT.78 P.1/3

SAITEK

BILL OF MATERIALS

PROJECT : RT17B (Montreux)

ART.NO. : 462

REVISION : 1

REVISION HISTORY

REVISION	DATE	BY	DESCRIPTION OF CHANGES
P1	24.02.95	Leon Wong	New release (BoM based on ST17).
1	19.05.95	Leon Wong	Revise EPROM to ATMEL brand; change DC jack inlay; change key top color to black; revise part nos. for giftbox and manual.

RELATED DOCUMENTS REV

Schematic dwg : ST17

Prepared By : Leon
Leon Wong

Approved by : BDM1

Distribution :
+1.00 [X] MMM,FAM,IEM, SEE, SEC, SEM; QAM
+0.10 [ ] MMM,FAM,IEM SEE; QAM
+0.01 [ ] MMM,IEM

Date issue : 23 MAY 1995

CHG MOD: NW=new component; * =desc/PN/Ref changed +/-=cost up/down; C/NC=consigned/non-consigned; +/-Q=QTY up/down

984620 - RT178, MONTREUX Rev : 1

Level	Item	Chg	Stock Code	Rev	Cons	Description	Qty Per	Reference
1			984620-00000	1		UNIT ASSEMBLY,FOR RT178	1.000	
2			914620-00001	1		GUTS ASSEMBLY - LOGIC,RT178	1.000	
3	1		513220-01511			PCB,LOGIC,D-SIDED,1.6MM,FR4	1.000	
3	2		860902-40000		RC	MICROPROCESSOR,FOR ST17 (ARM60)	1.000	
3	3		513220-03570		RC	PCB,CONVERT ARM60 TO ARM2 MICROPROCESSOR	1.000	RUNNING CHANGE
3	4		513220-03571			PCB,CONVERT ARM60 TO ARM2 MICROPROCESSOR	.000	
3	5		870013-216V8		RC	PAL,16V8-15 AMD FOR ST17 (ARM60) U6	1.000	U6
3	6		000140-20254		RC	IC SOCKET,DIP,20PINS,P=2.54MM	2.000	FOR U6,U14
3	7		832080-00256		RC	SRAM,628256,32KX8,80NS,DIP28	4.000	U2,U8,U13,U17
3	8		870014-216V8		RC	PAL,16V8-15 AMD FOR ST17 (ARM60) U14	1.000	U14
3	9	*	842150-TMS20		RC	EPROM,BLANK,TMS27C020,256KX8 CMOS,150NS	1.000	U7
3	10		740603-00000		RC	TTL,-00,QUAD 2-INPUT NAND GATES,HC	1.000	U15
3	11		741233-00374		RC	TTL,-374,OCTAL D-TYPE FLIP-FLOP,HC	5.000	U5,11,12,16,18
3	12		741243-00244		RC	TTL,-244,LINE DRIVER/BUFFER,HC	1.000	U1
3	13		741253-04060		RC	TTL,-4060,14-STAGE BINARY COUNTER,HC	1.000	U3
3	14		741263-00074		RC	TTL,-74,DUAL D-TYPE FLIP-FLOP,HC	1.000	U10
3	15		741274-00161		RC	TTL,-161,SYNC,BINARY COUNTER,F	1.000	U4
3	16		741285-00125		RC	TTL,-125,QUAD BUS BUFFER,3 STATE,HCT	1.000	U19
3	17		643276-80120		RC	CRYSTAL,32.768KHZ,20PPM	1.000	X1
3	18		642832-23150		RC	CRYSTAL OSCILLATOR,28.322MHZ,50PPM	1.000	X2
3	19		670255-7C800		RC	TRANSISTOR,PNP,BC557,C,CENTRE B	1.000	Q2
3	20		670154-7C800		RC	TRANSISTOR,NPN,BC547,C,CENTER B	2.000	Q1,Q4
3	21		671180-91200		RC	TRANSISTOR,PNP,BD912,C,CENTRE B	1.000	Q3
3	22		000260-00005		RC	BATTERY,LITHIUM 2032,3.0V,WITH S.LEADS	1.000	B1
3	23		596200-00020		RC	JUMPER SELECTOR SET,3 CKT	2.000	
3	24		654148-10000			DIODE,SWITCHING,1N4148	5.000	D6-D9,D10 ONU15
3	25		660005-12205		RC	LED,RED,RECT,2X5MM,TOSHIBA,TLR208	5.000	D1-D5
3	26		630003-10000		RC	INDUCTOR,TOROID,16T	1.000	T1
3	27		611025-31102			RESISTOR,FIXED C-FILM,1K,5%,1/4W	3.000	R11,R15,RP
3	28		611015-31102			RESISTOR,FIXED C-FILM,100,5%,1/4W	2.000	R1,R2
3	29		616815-31102			RESISTOR,FIXED C-FILM,680,5%,1/4W	1.000	R12
3	30		612225-31102			RESISTOR,FIXED C-FILM,2K2,5%,1/4W	8.000	R3-R10
3	31		612225-31102			RESISTOR,FIXED C-FILM,2K2,5%,1/4W	1.000	RB3
3	32		611035-31102			RESISTOR,FIXED C-FILM,10K,5%,1/4W	2.000	R13,RG1
3	33		611245-31102			RESISTOR,FIXED C-FILM,120K,5%,1/4W	1.000	R14
3	34		613315-31102			RESISTOR,FIXED C-FILM,330,5%,1/4W	1.000	R16
3	35		611535-31102			RESISTOR,FIXED C-FILM,15K,5%,1/4W	3.000	R17,RB1,RB2
3	36		611535-31102			RESISTOR,FIXED C-FILM,15K,5%,1/4W	3.000	RK1,RK2,XR1
3	37		616825-31102			RESISTOR,FIXED C-FILM,6K8,5%,1/4W	1.000	RC1
3	38		611035-32109		RC	RESISTOR,ARRAY C-FILM,10KX8,5%,1/4W,9	1.000	RP1
3	39		611065-31102			RESISTOR,FIXED C-FILM,10M,5%,1/4W	1.000	RX
3	40		000230-00001		RC	SLIDE VOLUME,50KB,RS10F121A	1.000	P1
3	41		62104M-0161X			CAPACITOR,MONO,0.1UF,+/-20%,16V(+80-20%)	5.000	C1,C2,C5,C7,C8
3	42		62104M-0161X			CAPACITOR,MONO,0.1UF,+/-20%,16V(+80-20%)	6.000	C9,C10,C15-C18
3	43		62104M-0161X			CAPACITOR,MONO,0.1UF,+/-20%,16V(+80-20%)	2.000	C21,C13
3	44		62105M-01612			CAPACITOR,TAN-CAP,1UF,+/-20%,16V	4.000	C1N,C2N,C3,C4
3	45		62105M-01612			CAPACITOR,TAN-CAP,1UF,+/-20%,16V	3.000	C6,C12,CS1
3	46		62221J-05014			CAPACITOR,C-CAP NPO,220PF,+/-5%,50V	1.000	CF1
3	47		62471J-05014			CAPACITOR,C-CAP NPO,470PF,+/-5%,50V	1.000	C28 ADD ON U14
3	48		62105M-01612			CAPACITOR,TAN-CAP,1UF,+/-20%,16V	1.000	CVA1

RT17B P. 3/7

994620 - RT17B, MONTREUX Rev : 1

Level	Item	Chg	Stock Code	Rev	Cons	Description	Qty Per	Reference
3	49		62225M-01612			CAPACITOR,TAN-CAP,2.2UF,+/-20%,16V	2.000	C14,C19
3	50		62820K-01614			CAPACITOR,C-CAP,NPO,82PF,+/-10%,16V	2.000	C11,CF2
3	51	-	62330J-05014			CAPACITOR,C-CAP,NPO,33PF,+/-5%,50V	1.000	C22 ON U2
3	52		62101M-01611			CAPACITOR,C-CAP,100PF,+/-20%,16V	1.000	CTOG
3	53		62106Z-01616			CAPACITOR,E-CAP,10UF,+80-20%,16V,L.L	1.000	C20
3	54		62151M-01611			CAPACITOR,C-CAP,150PF,+/-20%,16V	2.000	C26-27 ON U14
3	55		62471M-01611			CAPACITOR,C-CAP,470PF,+/-20%,16V	1.000	XC1
3	56		62105K-01012			CAPACITOR,TAN-CAP,1UF,+10%,10V	3.000	C23-25 MCU PCB
3	57		67032S-C1623		RC	TRANSISTOR,NPN,2SC1623-L7,CHIP TYPE	1.000	Q5 ON MCU PCB
3	58		611035-A4102			RESISTOR,CHIP,C-FILM,10K,5%,1/10W	1.000	R18 ON MCU PCB
3	59		613315-A1102			RESISTOR,CHIP,C-FILM,330,5%,1/10W	1.000	R19 ON MCU PCB
3	60		000010-00100			ACL,RESET CONTACT,D=10MM,CR STEEL	1.000	
3	61		000140-32254			IC SOCKET,DIP,32PINS,P=2.54MM	5.000	FOR RAM & EPROM
3	62		000110-00040			NUT,M2.6XP0.45X1.6MM,MILD STEEL	1.000	FOR Q3 (T3)
3	63		000071-20424			SCREW,M/S,+PAN,M2.6XP0.45X6MM,FLAT	1.000	FOR Q3 (T3)
3	64		000030-01220			CONN ARRAY,N =11,L=20MM,P=2.54MM,E=11MM	4.000	FOR MCU PCB
3	65		000030-01230			CONN ARRAY,N=10,L=20MM,P=2.54MM,E=11MM	4.000	FOR MCU PCB
2			91A103-00002	1		GUTS ASSEMBLY - LED	1.000	
3	66		51A103-02520			PCB,LED,S.S,1.6MM,PAPER PHENOLIC	1.000	
3	67		660005-12205		RC	LED,RED,RECT,2X5MM,TOSHIBA,TLR208	11.000	LED1-8,A-C
3	68		000030-00150			CONN ARRAY,N=12,L=17MM,P=2.54MM,E=3.5MM	1.000	
2			913220-00003	1		GUTS ASSEMBLY,LCD,FOR ST17	1.000	
3			923220-00730	1		MODULE,MICROPROCESSOR ON PCB,FOR ST17	1.000	
4	69		513220-01231			PCB, LCD,DS.1.6MM,FR4	1.000	
4	70		750021-01520		RC	IC,LCD DRIVER,SED1520,DIE FORM	1.000	U21
4	71		923220-00730C			BONDING CHARGE FOR ST17 LCD DIE	1.000	
3	72		611535-31102			RESISTOR,FIXED C-FILM,15K,5%,1/4W	5.000	R8-R12
3	73		62104Z-01611			CAPACITOR,C-CAP,0.1UF,+80-20%,16V	6.000	C8-C13
3	74		611455-31102			RESISTOR,FIXED C-FILM,1M4,5%,1/4W	1.000	R13
3	75		000030-01100			CONN ARRAY,N=14,L=50MM,P=2.54MM,E=3.5MM	1.000	
2			913220-00004	1		GUTS ASSEMBLY - COMMAND,FOR ST17	1.000	
3	76		513220-01140			PCB,COMMAND,1.6MM PAPER PHENOLIC	1.000	
3	77		252710-01000		RC	RUBBER,CONDUCTIVE RUBBER,GREY,ST8	1.000	
3	78		000030-00950			CONN.ARRAY,N=14,L=30MM,P=2.54,E=3.5MM	1.000	
2			913220-00005	1		GUTS ASSEMBLY - RFI,FOR ST17	1.000	
3	79		512810-02150			PCB,RFI,S.S,1.6MM PAPER PHENOLIC	1.000	
3	80		630003-10000		RC	INDUCTOR,TOROID,16T	1.000	
3	81		000051-25155			JUMPER,L=12.5MM,LL=15MM,D=0.5MM	2.000	
3	82		000220-00002			SOCKET,DC POWER JACK,TC 18-014	1.000	
3	83		000062-22043			STRAND WIRE,RED,L=220MM,E=3.5MM,AWG28	1.000	
3	84		000060-22043			STRAND WIRE,BLACK,L=220MM,E=3.5MM,AWG28	1.000	
2			964620-00000	1		CASING ASSEMBLY,FOR RT17B	1.000	
3	85		312710-05201		RC	SENSOR,CHESSBOARD,COMBO ST8,AG	1.000	
3	86		324620-00500		RC	OVERLAY,FOR RT17B,CHESSBOARD,COMBO,LEXAN	1.000	

994620 - RT178, MONTREUX Rev : 1

Level	Item	Chg	Stock Code	Rev	Cons	Description	Qty Per	Reference
3	87		220000-00605		RC	METAL,PLATE,191.2X191.2,W/D-TAPE,ST8	1.000	
3	88		354620-00300		RC	INLAY,FOR LCD,PVC,GOLDEN S.SCREEN,RT178	1.000	
3	89		354620-00100		RC	INLAY,FOR TOP CAB,PVC,GOLDEN S.SCN,RT178	1.000	
3	90		344620-00200		RC	NAME PLATE,AL,ARM6 RISC,SILKSCREEN,RT178	1.000	
3	91	*	354620-00800		RC	INLAY,FOR JACK,LEXAN,GOLD,RT178	1.000	
3	92		533220-00310		RC	LCD,FOR ST17	1.000	
3	93		292720-03000		RC	DOUBLE SIDED TAPE,FOR ST12 LCD LENS	1.000	
3	94		000090-00210		RC	FOAM PAD,FOR ST12,52X24.8X2.7MM	1.000	
3	95		000031-00930		RC	CONN,HEAT SEAL,JS,N=70,L=30MM,P=0.68	1.000	
3	96		250000-00150		RC	RUBBER ROD,48X2.9X2.3MM,COMPRESS KE951U	1.000	
3	97		215120-02502		RC	PLASTIC,SENSOR CLAMP LARGE,PC,CLEAR	1.000	
3	98		214210-03500		RC	PLASTIC,LOCK PIN,NYLON 66,WHITE	1.000	
3	99		21A103-06000		RC	PLASTIC,ACL SW.PIN,HIPS,BLACK	1.000	
3	100		000130-00270			BUZZER,D=27MM	1.000	
3	101		000021-00010			RUBBER FOOT,3M,D12X3.2MM,ADHESIVE	4.000	
3	102		000101-01003			SPONGE,10X10X3MM	1.000	FOR ACL
3	103		000090-00251			FOAM PAD,80X20X4.0MM,ADHESIVE,ST17-PM-29	1.000	FOR SRAM
3	104		000090-00260			FOAM PAD,20X15X2.5MM,ADHESIVE,ST17-PM-30	1.000	FOR EPROM
3	105		35A103-06700		RC	INLAY,FOR LCD CONTRAST(DIM),PVC,YO1GA	1.000	
3	106		35A103-06800		RC	INLAY,FOR LCD CONTRAST(BRIGHT),PVC,YO1GA	1.000	
3	107		000068-18043			STRAND WIRE,GREY,L=180MM,E=3.5MM,AWG28	2.000	FOR BUZZER
3	108		000073-21544			SCREW,S/T,+PAN,M3.0X10MM,A	6.000	FOR CABINET
3	109		000073-21424			SCREW,S/T,+PAN,M2.6X6MM,A	4.000	FOR LCD PCB
3	110		000073-21434			SCREW,S/T,+PAN,M2.6X8MM,A	4.000	FOR KEY BOARD
3	111		000073-21434			SCREW,S/T,+PAN,M2.6X8MM,A	2.000	FOR LOGIC PCB
3	112		000073-21434			SCREW,S/T,+PAN,M2.6X8MM,A	2.000	FOR PANEL
3			954620-00000	1		CABINET SET,FOR RT178	1.000	
4	113		212710-00119		RC	PLASTIC,T.CAB,HIPS,SPY.BLACK	1.000	
4	114		212710-00218		RC	PLASTIC,B.CAB,HIPS,BLACK,CHINA	1.000	
4	115		212720-00250		RC	PLASTIC,PANEL,HIPS,SPY BLACK,RT178 S.SCN	1.000	
4	116		212710-00700		RC	PLASTIC,BATT.LID,HIPS,BLACK	1.000	
4	117		212710-00600		RC	PLASTIC,PIECE DOOR,HIPS,BLACK	1.000	
4	118		213100-00102		RC	PLASTIC,EPROM COVER,HIPS,BLACK	1.000	
4	119		21A103-03300		RC	PLASTIC,SWITCH ADAPTER,ABS,BLACK	1.000	
4	120		21A103-03400		RC	PLASTIC,SWITCH CAP,ABS,BLACK	1.000	
4	121	*	212710-00801		RC	PLASTIC,KEY TOP,SMALL	12.000	
4	122	*	212710-00901		RC	PLASTIC,KEY TOP,LARGE	5.000	
1			944620-10000	1		PACKING ASSEMBLY,FOR RT178	1.000	
2	123		360000-00240			LABEL,FOR SERIAL NO,ADHESIVE PAPER H+G	1.000	
2	124		000123-00200			POLYBAG,300X200X0.045MM	1.000	FOR MANU,OPTION
2	125		000125-40320			POLYBAG,540X320X0.045MM	1.000	FOR UNIT
2	126		454620-00600			CARTON,FOR RT178,5PCS/CTN	.200	
2	127		453220-01900			INSERT,FOR ST17,PAPER,FOR UNIT	1.000	
2	128		453220-02000			INSERT,FOR ST17,PAPER,FOR ADAPTER	1.000	STANDARD
2	129		453220-02800			INSERT,FOR ST17 UL-8S,CORRUGATED PAPER	.000	UL-8S
2			243220-19000	1		CHESSMEN SET,ST17,178+184,RUB.MAG	1.000	
3	130		242050-18411		RC	CHESSMEN,YO1C,16,SPRAY GOLD,RUB MAGNET	1.000	
3	131		242050-17811		RC	CHESSMEN,YO1C,16,BLACK,RUB MAGNET	1.000	

SAITEK LTD. REPORTS BILL OF MATERIAL Run : 18/05/95 16:48 Page
Prog: KPSPC/6603

994620 - RT178, MONTREUX Rev : 1

Level	Item	Chg	Stock Code	Rev	Cons	Description	Qty Per	Reference
1			974620-00000	1		OPTIONS ASSEMBLY,FOR RT178	1.000	
2	132		334620-00700		RC	RATING PLATE,FOR RT178,PVC,H&G,CN	1.000	
2	133	*	414620-41100		RC	MANUAL,FOR RT178,E/G/F/D.H&G	1.000	
2	134	*	424620-61100		RC	GIFTBOX,FOR RT178,E/D/F/G/S/I,H&G	1.000	
2	135		430113-02000		RC	CARD,GUARANTEE,GERMAN,H&G	1.000	
2	136		540000-00390		RC	ADAPTER,VDE,5.8V,500MA,C+,BARREL,SWL	1.000	
2	137		541000-00410		RC	ADAPTER,UL,5.8V,500MA,C+,BARREL,SWL	.000	UL
2	138		542000-00420		RC	ADAPTER,BS,5.8V,500MA,C+,BARREL,SWL	.000	BS
1	139		40AMC			ASSEMBLER MATERIAL CHARGE		
1	140		40ALC			ASSEMBLER LABOUR CHARGE		

Material Subtotal
Assembler Charge
Assembler Labour Charge
Non-consigned material Cost
Material Discrepancy Allowance

C.O.G.

RT178 P. 16/27

PIN DIAGRAM

PLASTIC LEADED CHIP CARRIER (PLCC)

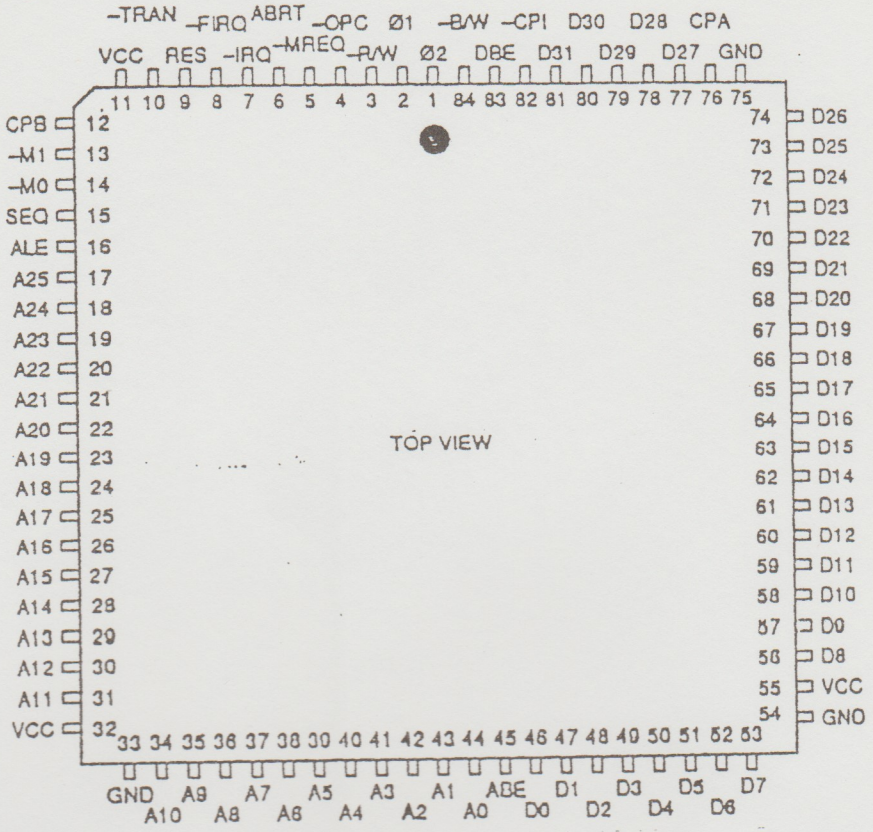

CONNECTION DIAGRAMS

Top View

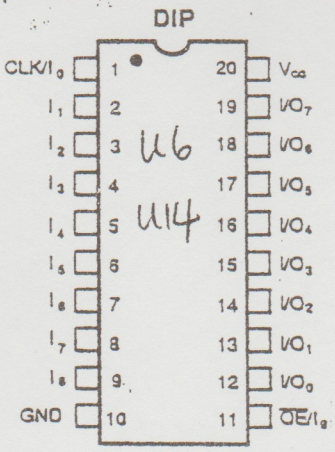

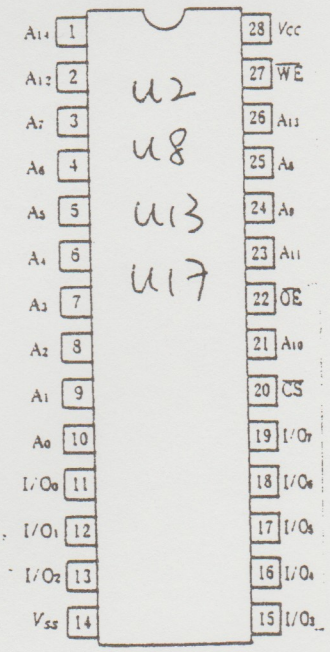

(Top View)

RT 17B P. 17/21

8. MONTREUX FUNCTIONAL TEST PROCEDURE

Purpose	Procedure	Observation
1. Power up	- Insert an adapter with output voltage = 5.6V - Press GO while keeping the BACK key pressed	- No response - Row LEDs 8 and 7 light up then row LED 4-6 also light up. - After a while, all 16 LEDs will light shortly and new game sound is given out. - LCD shows - Montreux - ← → - then RAM cleared 01. 00:00 00:00 ( )
2. QC test mode	- Press ACL while keeping ←, → keys pressed	- LCD shows QC Test Mode ← → and starts scanning as in Table 1
	- Press function keys as shown in Table 2	- See Table 2
	- Press 64 chessboard square in sequence	- Corresponding square LEDs are on and LCD show corresponding square coordinates in the format of key =
3. Reset unit	- Press ACL	- Row LEDs 8 and 7 light up then row LED 4-6 also light up. - After a while, all 16 LEDs will light shortly and new game sound is given out.

Purpose	Procedure	Observation
		- LCD shows - Montreux - ← → - then RAM is empty 01. 00:00 00:00 ( )
4. Multimove	- Press MENU	- LCD shows game ( )
	- Press ↓	- LCD shows settings ( )
	- Press ENTER	- LCD shows oppo = norma ( ) →
	- Press ENTER	- LCD shows = normal ( ) Note: = is blinking
	- Press ↓	- LCD shows = 2 players ( ) Note: = is blinking
	- Press ENTER	- LCD shows oppo = 2 pla ( ) →
	- Press MENU	- LCD shows RAM is empty 01. 00:00 00:00 ( )

Purpose	Procedure	Observation
	- Press F2, F4	- F2 then F4 LEDs turn on respectively - All LEDs are off, LCD shows Your Move 01. 00:00 00:03 (●) Note: Clock on the right side is counting up.
	- Press E7, E5	- E7 then E5 LEDs turn on respectively - All LEDs are off, LCD shows Your Move 02. 00:05 00:19 ( ) Note: Clock on the left side is counting up
	- Press G2, G4	- G2 then G4 LEDs turn on respectively - All LEDs are off, LCD shows Your Move 02. 00:06 00:30 (●) - Note: Clock on the right side is counting up
	- Press PLAY	- LCD shows Thinking ..... 02. 00:12 01:13 (●) - Note: Clock on the right side is counting up - then Move ♗ d8-h4 ≠ 02. 00:12 01:13 (●)
	- Press d8	- d8 LEDs are on - h4 LEDs are on and LCD shows Move ♗ d8-h4 ≠ 02. 00:12 01:13 (●)

RT17B p. 20/57

Purpose	Procedure	Observation
	- Press h4	- LCD shows Checkmate 03. 00:12 01:13 ( )
5. Check jumper	- Press OFF	- LCD shows Off ? (Y N) 03. 00:13 01:13 ( ) Note: "Y" is blinking
	- Press ENTER	- LCD shows nothing
	- Press NEWGAME twice	- No response
	- Press GO	- Row LEDs 8, 7 light up, then row LEDs 4-6 also light up. - After a while, all 16 LEDs will light shortly and new game sound is given out. - LCD shows - Montreux - ← → then Game 2 moves 03. 00:12 01:13 ( ) Note: if LCD shows Game cleared 01. 00:00 00:00 ( ) or RAM is empty 01. 00:00 00:00 ( ) it indicated that wrong jumper selection for SRAM

Remarks:
The time shown on the clocks may be different from the diagrams on this functional test procedure.

Purpose	Procedure	Observation
	- Press BACK	- LCD shows Back ⌬ d8-h4 ≠ 02. 00:12 01:13 (●) and h4 LEDs are on
	- Press h4	- d8 LEDs are on - LCD shows as above
	- Press d8	- LCD shows Your move 02. 00:12 01:42 (●) Note: black clock starts counting up
6a. Check High voltage	- Repeat step 1 to 5 with input voltage at adapter socket (skip step 2) = 5.7V	
6b. Check memory	- Press OFF	- LCD shows Off? (Y N) 02. 00:14 01:14 (●) Note: Y is blinking and the black clocks count up
	- Press ENTER - Remove the adapter - Wait for 10 minutes or longer - Reinstall the energized 5.7V adapter	- LCD is blank

Purpose	Procedure	Observation
	- , Press GO	- Row LEDs 8, 7 light up, then row LEDs 4-6 also light up. - After a while, all 16 LEDs will light shortly and new game sound is given out. - LCD shows - Montreux - ← → then Game 2 moves 03. 00:12 01:13 ( ) Note: if LCD shows RAM is empty 01. 00:00 00:00 ( ) it indicated a problem with the memory backup circuit.
7. Burn-in test (A) (burn for 50 hours)	- ACL	- Row LEDs 8 and 7 light up then row LED 4-6 also light up. - After a while, all 16 LEDs will light shortly and new game sound is given out. - LCD shows - Montreux - ← → then Game cleared 01. 00:00 00:00 ( )
	- Press MENU	- LCD shows game ( )

Purpose	Procedure	Observation
	- Press ↑	- LCD shows L special ( )
	- Press ENTER	- LCD shows Γ demo play ( )
	- Press ENTER	- LCD shows Demo play 01. 00:00 00:00 ( ) then starts playing automatically

Note A :

The computer is defective if

1. LCD shows :

```
Err        X
01  YY:YY  ZZ:ZZ
```

where X is a number

2. No move is given out when the PLAY key is pressed at the end of the burn-in test.
3. Improper LEDs lights up.
4. LCD is blank.
5. The move number of the left hand side of the LCD always shows "01"

Note B :

For every 8 to 15 hours, follow the procedure below to test the unit

1. Press BACK key, press the chessboard squares according to the LEDs light up.
2. Then press PLAY key and press the chessboard squares according to the LEDs light up.
3. Repeat step 2.
4. Press MENU, ↑, ENTER, ENTER to continue the burn-in test.

Purpose	Procedure	Observation
8. Burn-in test (B) (2 hours)	- Press ACL while keeping ↑, ↓ keys pressed	- LCD shows self test ← → then t 00 00 00 00 c 00 00 00 00 the number adjacent to character C is counting up
	- Press any key once (press any key once will toggles between error type menu and error count menu)	- LCD shows e 00 00 00 00 c 00 00 00 12 (the number on e & t row must be zero throughout the test)

Note: The computer is defective if
1. The number on the upper row (e or t) is not zero.
2. Improper LEDs lights up.
3. LCD is blank.

Conditions:
1. During the function test, the power supply must be connected to a stabilizer.

Table 1:

1. All DMZ of row 1, all f-segment of 7-segment digit and white symbol
2. Same as 1 + row 2 of DMZ, a-segment and king symbol
3. Same as 2 + row 3 of DMZ, b-segment and queen symbol
4. Same as 3 + row 4 of DMZ, g-segment and rook symbol
5. Same as 4 + row 5 of DMZ, c-segment and bishop symbol
6. Same as 5 + row 6 of DMZ, d-segment and knight symbol
7. Same as 6 + row 7 of DMZ, e segment and pawn symbol
8. Blank
9. The LCD scans from column 1 of DMZ 1 to column 5 of DMZ 12, following symbol will be turn on during above scanning are left arrow, dot, black symbol, colon1, colon2 and right arrow
10. Blank
11. DMZ (1,3,5,7,9,11), 7-segment digit (2,4,6,8,10,12), right arrow, left arrow, white symbol, Queen, Knight, dot and colon 1 will be turn on at the same time.
12. DMZ (2,4,6,8,10,12), 7-segment digit (1,3,5,7,9,11), black symbol, King, Rook, Bishop, Pawn and colon 2 will be turn on at the same time.
13. All segment turn on
14. Blank
15. LCD shows

key =

Table 2:

Key pressed	LCD shows	Key pressed	LCD shows
OFF	key = OFF	↓	key = ↓
NEWGAME	key = N. GAME	ENTER	key = ENTER
PLAY	key = PLAY	♔	key = K
BACK	key = BACK	♕	key = Q
←	key = ←	♖	key = R
→	key = →	♗	key = B
MENU	key = MENU	♘	key = N
↑	key = ↑	♙	key = P

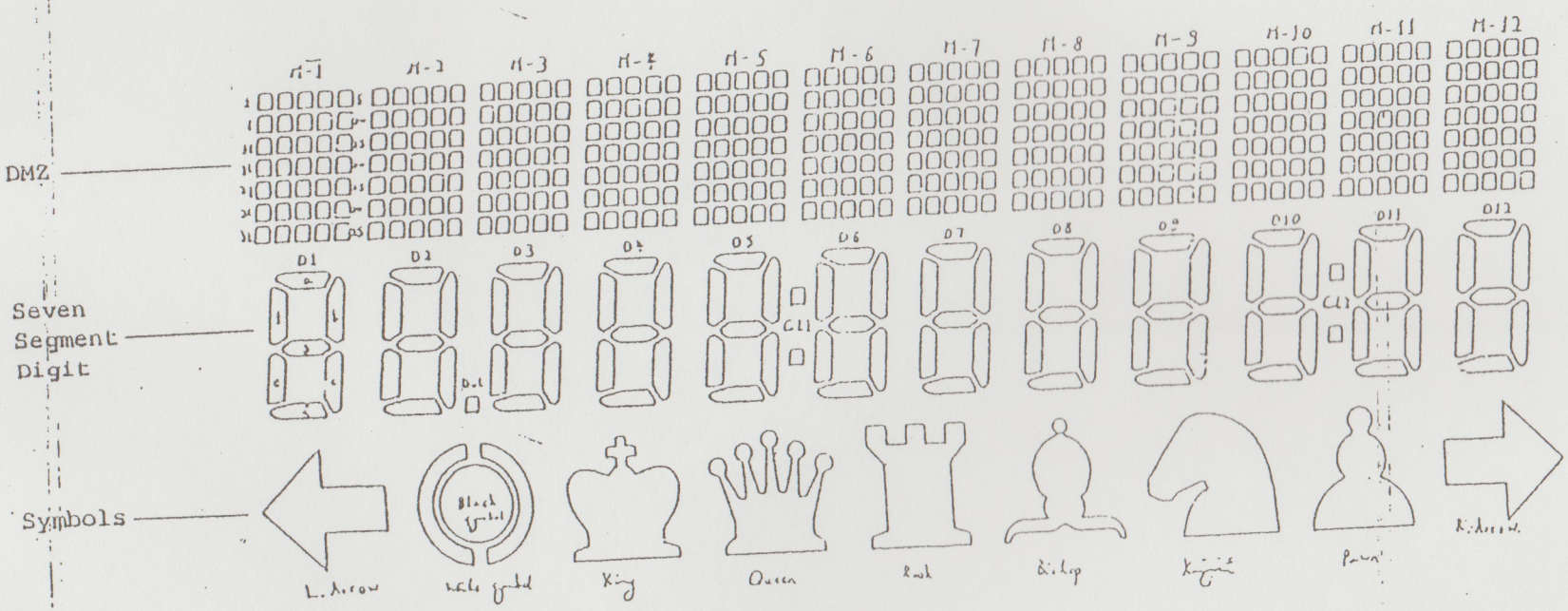
DMZ
Seven Segment Digit
Symbols
M-1
M-2
M-3
M-4
M-5
M-6
M-7
M-8
M-9
M-10
M-11
M-12
D1
D2
D3
D4
D5
D6
D7
D8
D9
D10
D11
D12
CL1
CL2
Dot
L. Arrow
Black Symbol
King
Queen
Rook
Bishop
Knight
Pawn
R. Arrow

RT 7B p. 2/4

ST17 SCHEMATIC

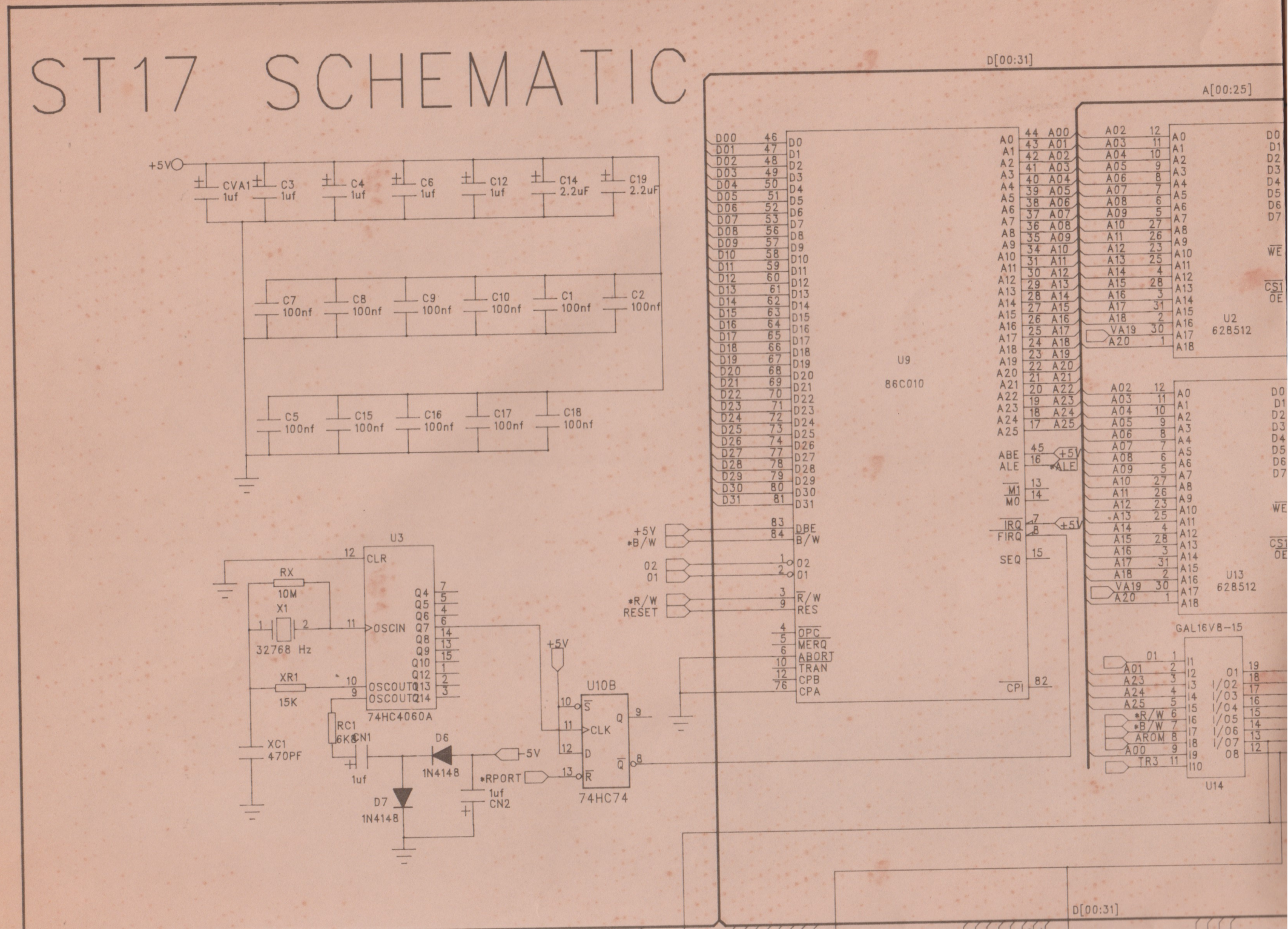

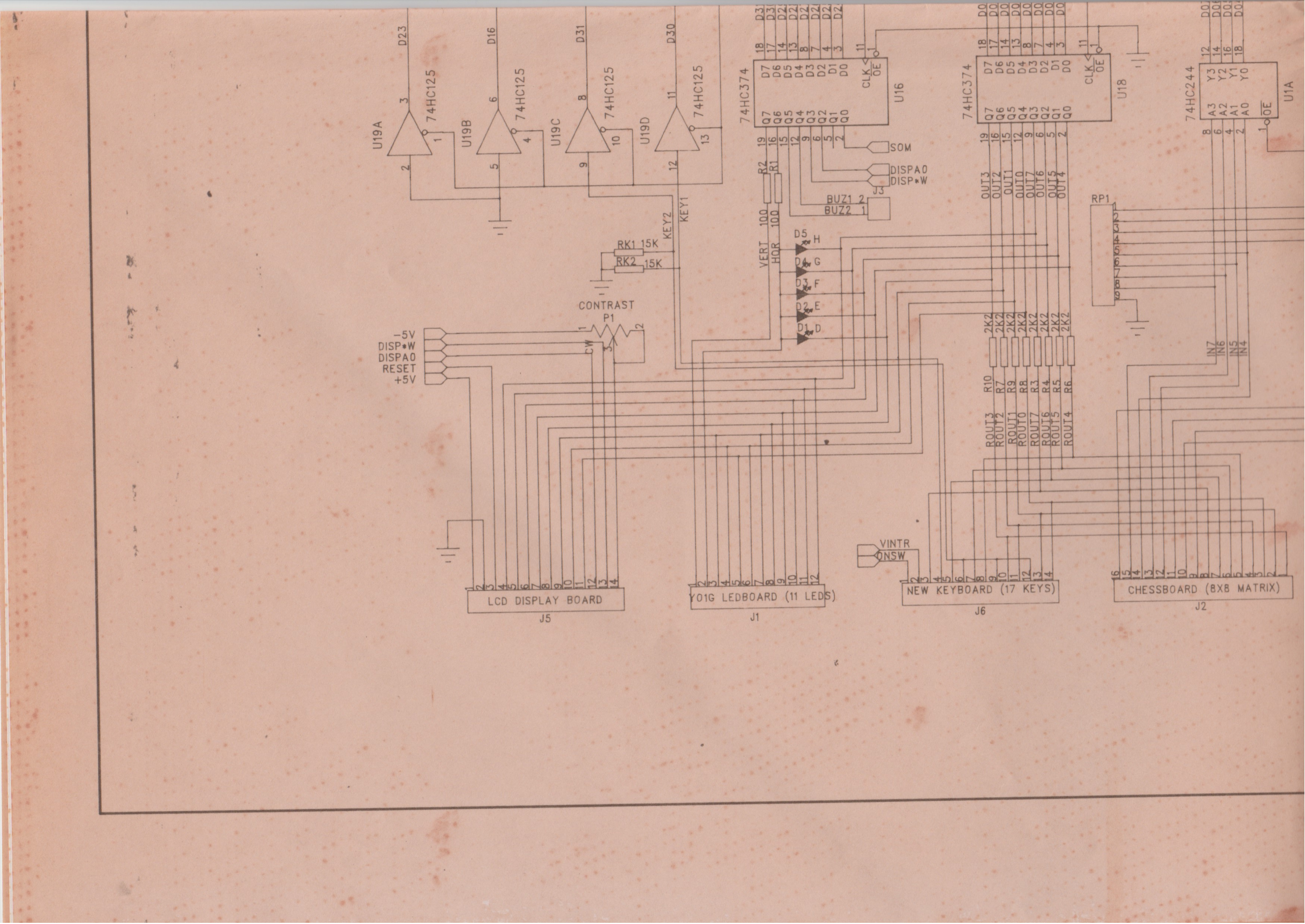
U19A
U19B
U19C
U19D
74HC125
D23
D16
D31
D30
KEY2
KEY1
RK1 15K
RK2 15K
CONTRAST
P1
CW
-5V
DISP*W
DISPA0
RESET
+5V
74HC374
U16
U18
CLK
OE
SOM
DISPA0
DISP*W
J3
BUZ1
BUZ2
R2
R1
100
VERT
HOR
D5 H
D4 G
D3 F
D2 E
D1 D
OUT3
OUT2
OUT1
OUT0
OUT7
OUT6
OUT5
OUT4
2K2
R10
R7
R9
R8
R3
R4
R5
R6
ROUT3
ROUT2
ROUT1
ROUT0
ROUT7
ROUT6
ROUT5
ROUT4
RP1
74HC244
U1A
Y3
Y2
Y1
Y0
A3
A2
A1
A0
IN7
IN6
IN5
IN4
VINTR
ONSW
LCD DISPLAY BOARD
J5
Y01G LEDBOARD (11 LEDS)
J1
NEW KEYBOARD (17 KEYS)
J6
CHESSBOARD (8X8 MATRIX)
J2

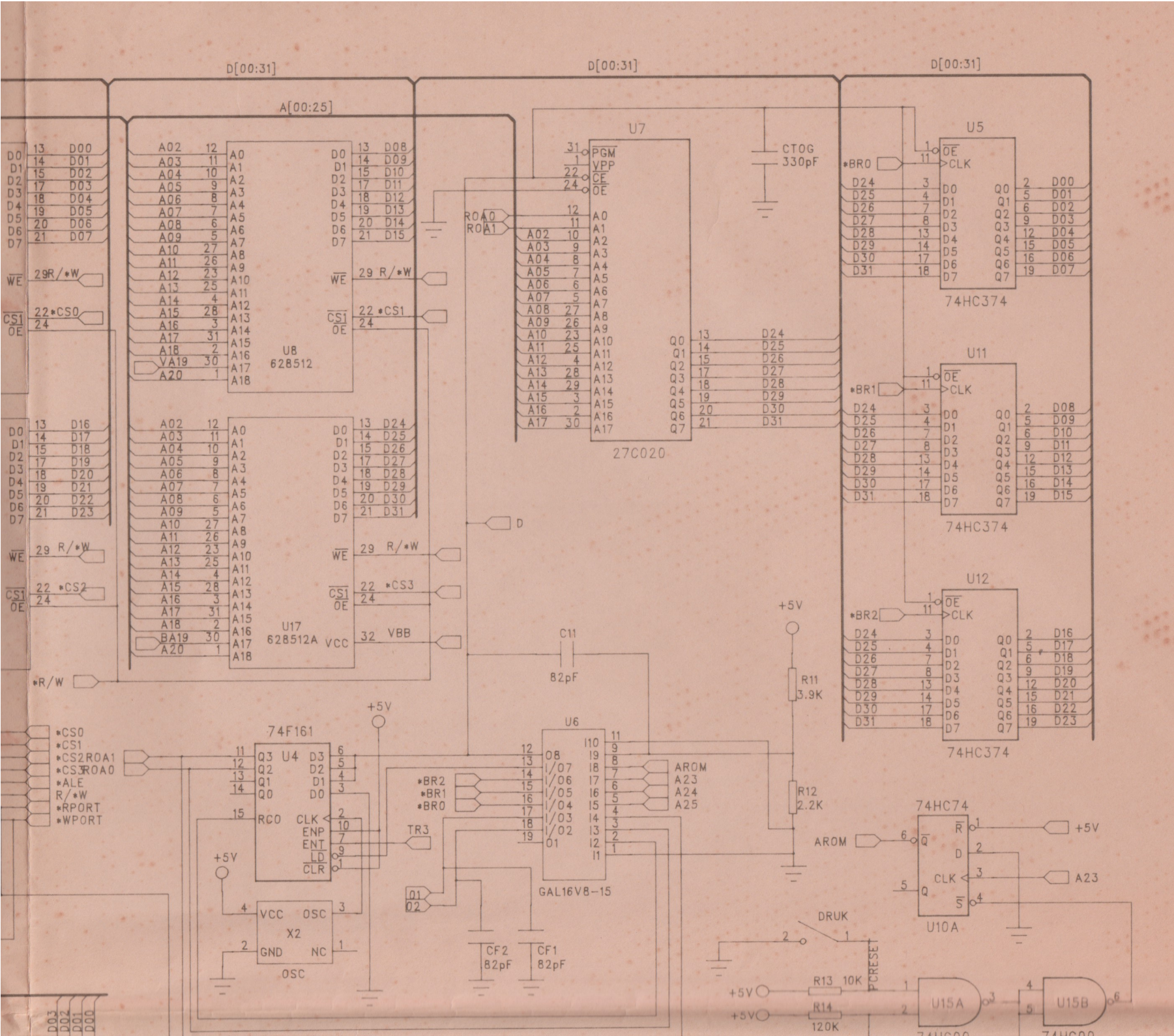
D[00:31]
A[00:25]
U8
628512
U17
628512A
U7
27C020
CTOG
330pF
U5
74HC374
U11
74HC374
U12
74HC374
C11
82pF
+5V
R11
3.9K
R12
2.2K
74F161
U4
U6
GAL16V8-15
X2
OSC
CF2
82pF
CF1
82pF
74HC74
U10A
DRUK
PCRESET
R13 10K
R14
120K
U15A
U15B
AROM
A23
A24
A25
TR3
*CS0
*CS1
*CS2ROA1
*CS3ROA0
*ALE
R/*W
*RPORT
*WPORT
*R/W
*BR0
*BR1
*BR2
D
VBB

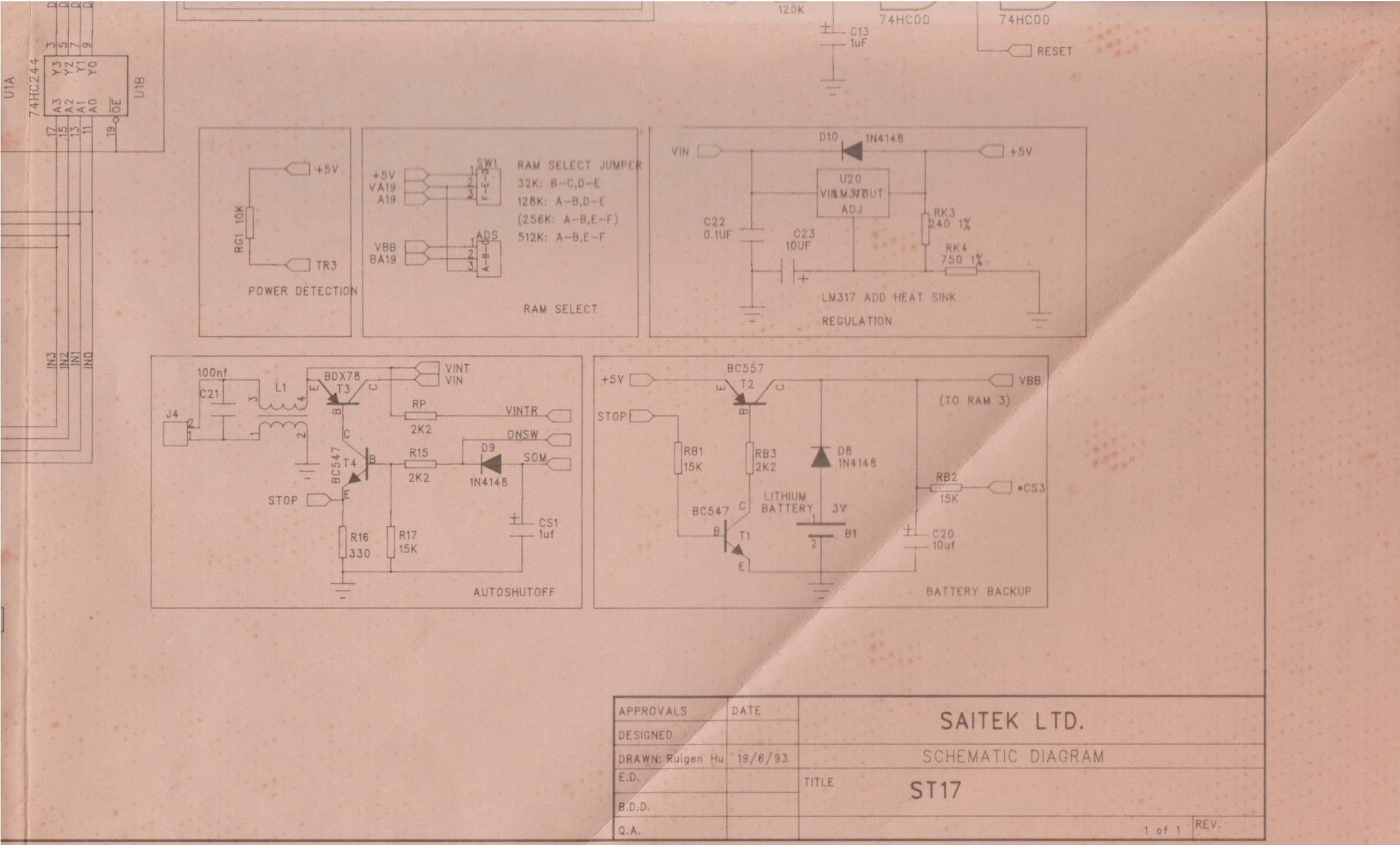

APPROVALS	DATE	SAITEK LTD.
DESIGNED		
DRAWN: Ruigen Hu	19/6/93	SCHEMATIC DIAGRAM
E.D.		TITLE ST17
B.D.D.		
Q.A.		1 of 1 REV.