NOVAG INDUSTRIES LIMITED

CONSTELLATION FORTE (ART NO. 864)

SERVICE MANUAL

C O N T E N T S

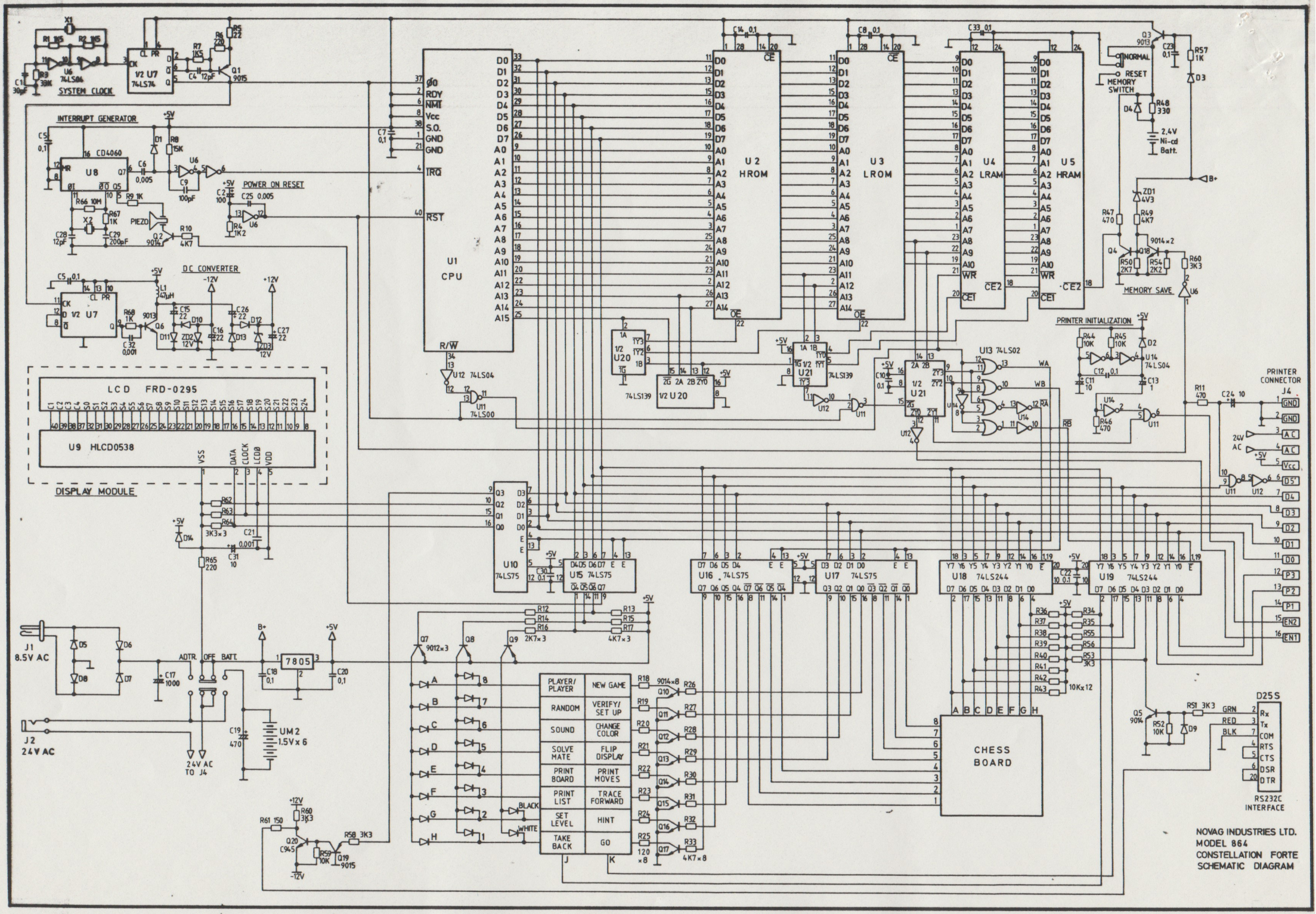
SYSTEM CLOCK
INTERRUPT GENERATOR
POWER ON RESET
DC CONVERTER
U1 CPU
U2 HROM
U3 LROM
U4 LRAM
U5 HRAM
NORMAL
RESET
MEMORY SWITCH
2,4V Ni-cd Batt.
MEMORY SAVE
PRINTER INITIALIZATION
PRINTER CONNECTOR
LCD FRD-0295
U9 HLCD0538
DISPLAY MODULE
J1 8.5V AC
J2 24V AC
24V AC TO J4
ADTR. OFF BATT.
UM2 1.5V x 6
PLAYER/PLAYER
NEW GAME
RANDOM
VERIFY/SET UP
SOUND
CHANGE COLOR
SOLVE MATE
FLIP DISPLAY
PRINT BOARD
PRINT MOVES
PRINT LIST
TRACE FORWARD
SET LEVEL
HINT
TAKE BACK
GO
CHESS BOARD
D25S
RS232C INTERFACE
NOVAG INDUSTRIES LTD.
MODEL 864
CONSTELLATION FORTE
SCHEMATIC DIAGRAM

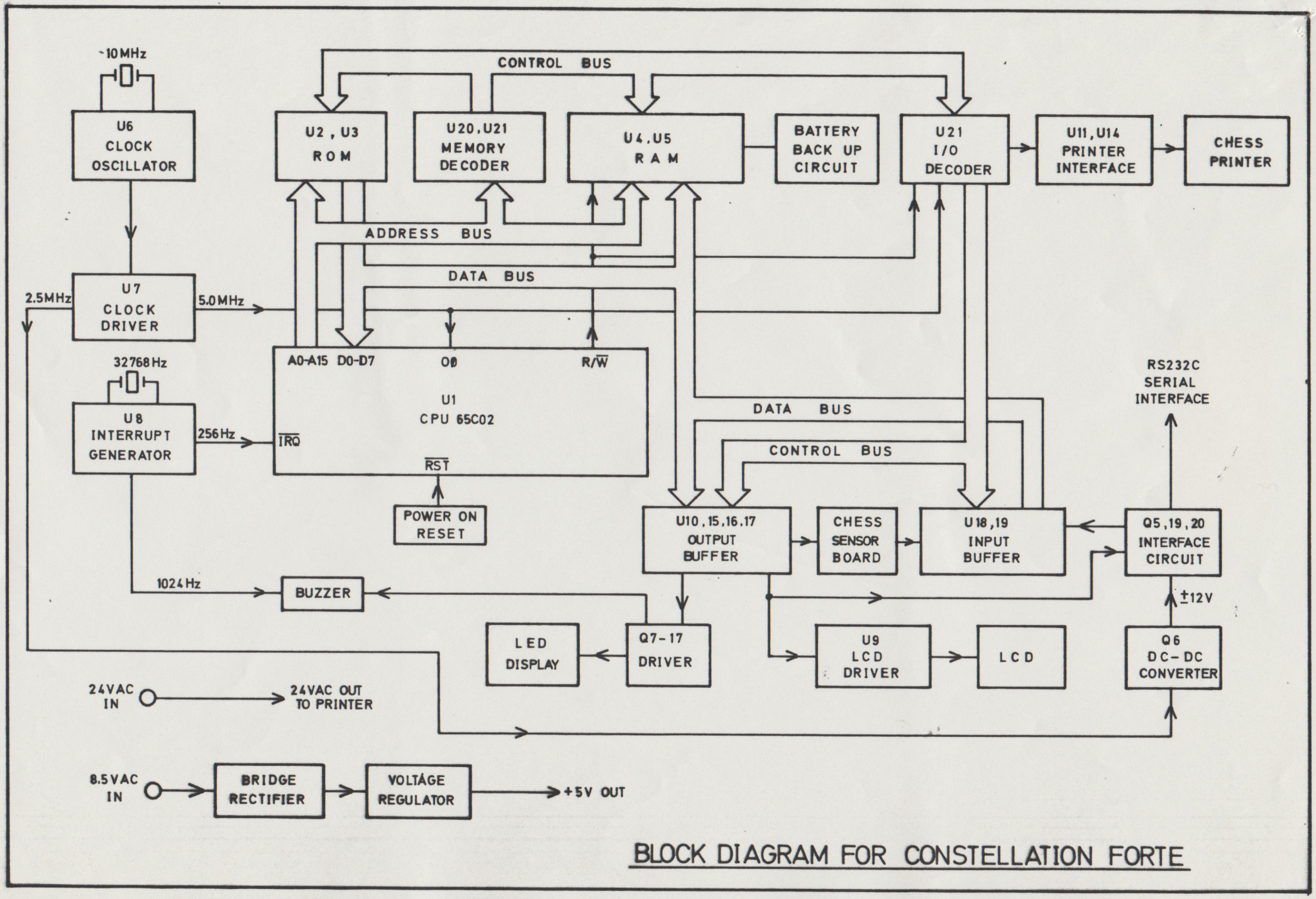

BLOCK DIAGRAM FOR CONSTELLATION FORTE

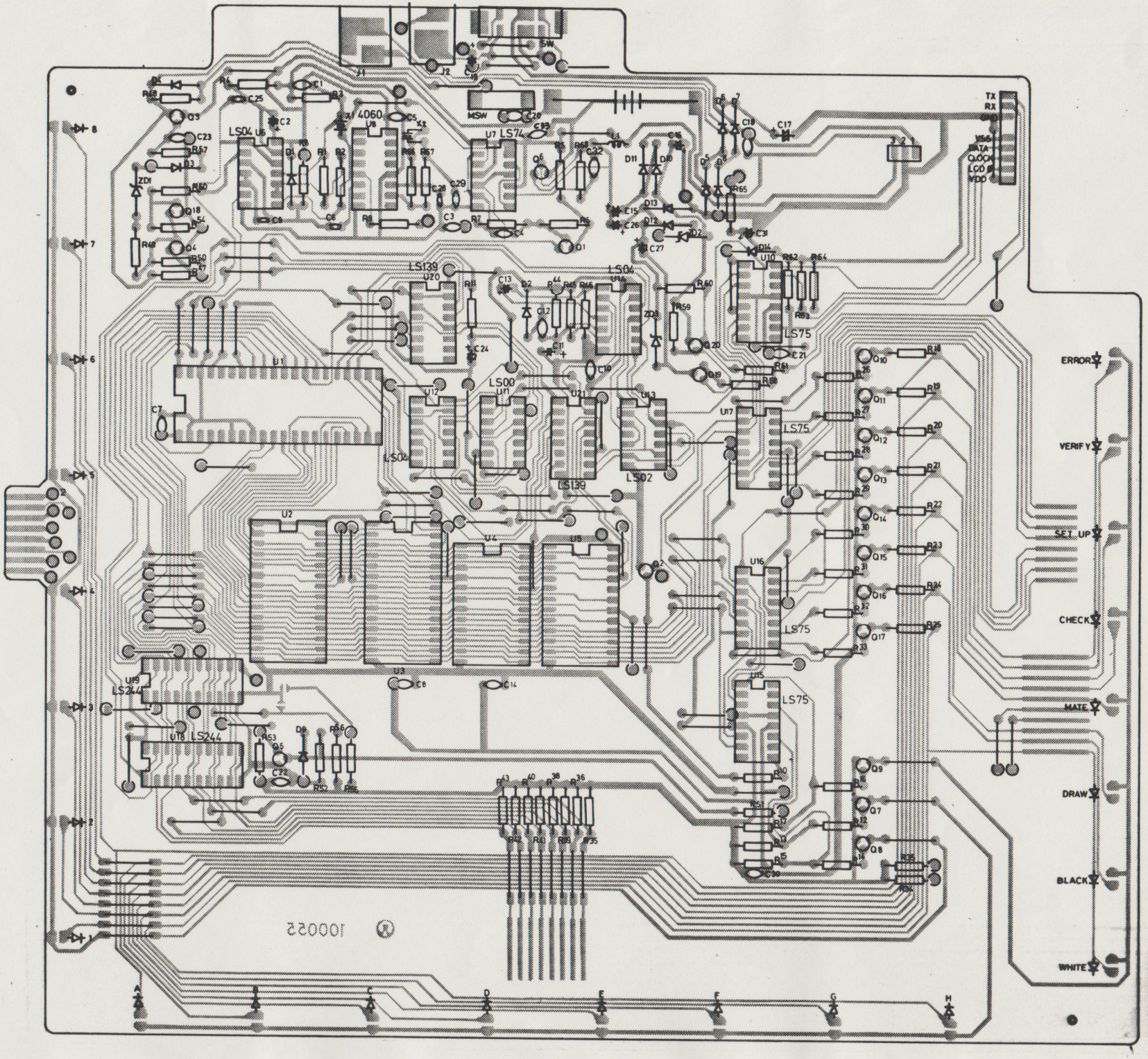
ERROR
VERIFY
SET UP
CHECK
MATE
DRAW
BLACK
WHITE
TX
RX
GND
VSS
DATA
CLOCK
LCD
VDD
LS04
4060
LS74
LS139
LS00
LS02
LS75
LS244
MSW
SW
100052

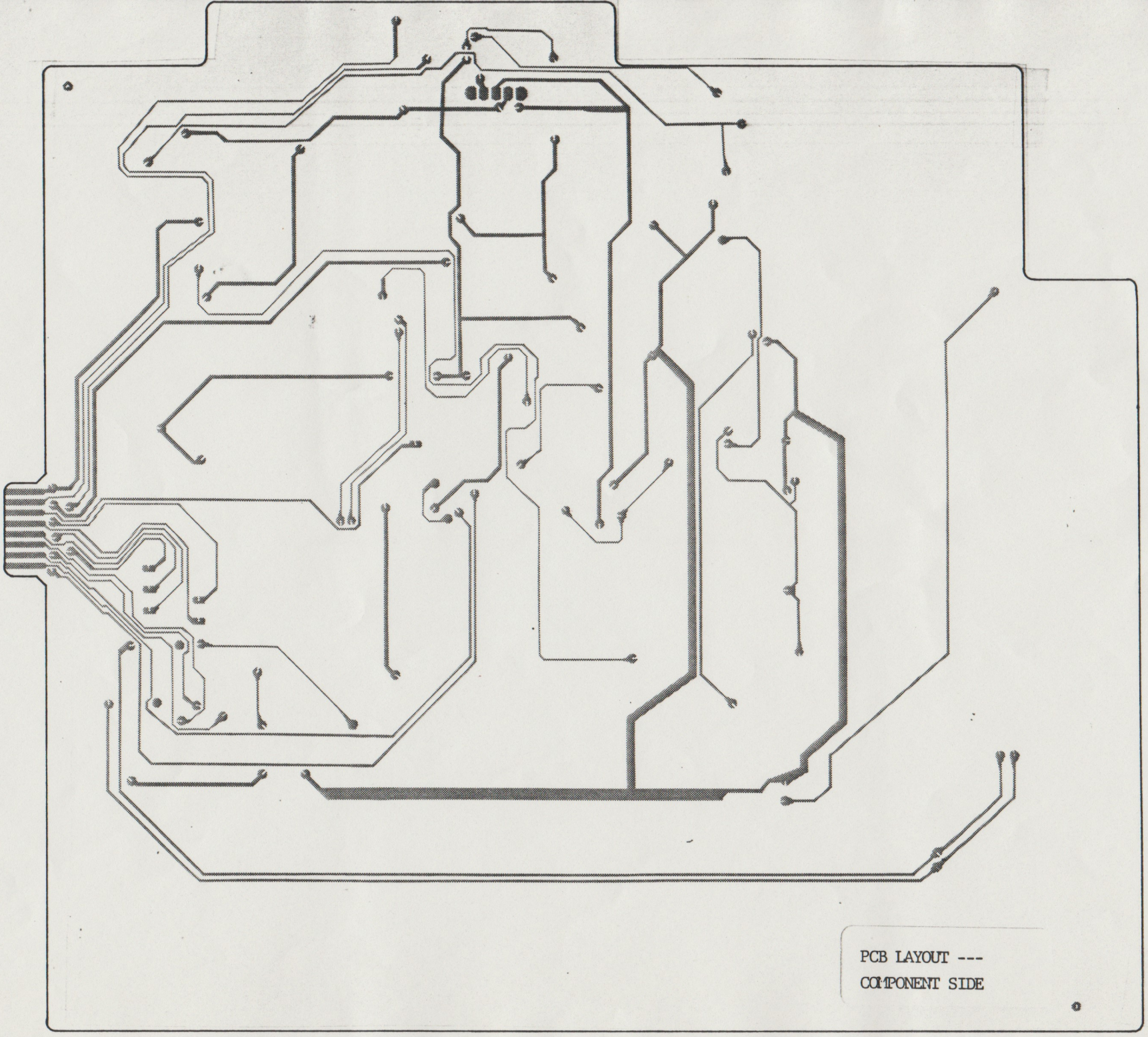

PCB LAYOUT ---
COMPONENT SIDE

5. PART LIST

MODEL : FORTE (864)

A) ASSEMBLY : MAIN PCB

ITEM	PART NO	DESCRIPTION	QTY	UNIT PRC (US$)
1	020017	CPU RP65C02-4	1	12.000
2	030001	NAND GATE 74LS00	1	0.500
3	030002	NOR GATE 74LS02	1	0.400
4	030003	HEX INVERTOR 74LS04	3	0.400
5	030004	COUNTER 74LS74	1	0.600
6	030005	LATCH 74LS75	4	0.600
7	030009	OCTAL BUFFER 74LS244	2	0.800
8	030019	DECODER 74LS139	2	0.560
9	030022	REGULATOR 7805	1	0.760
10	030042	BI-CONNTER 4060	1	1.000
11	050006	RECT. LED - GREEN	2	0.110
12	050007	RECT. LED - RED	16	0.130
13	070045	CMOS RAM 449C	2	6.000
14	070048	EPROM 27C256	2	10.000
15	100055	LOGIC PCB	1	9.000
16	130009	SLIDE SWITCH	1	0.160
17	130016	RESET SWITCH	1	0.080
18	160004	CER. CAP 0.1UF 12V	13	0.700
19	180005	32768 CRYSTAL	1	0.800
20	180008	10MHZ CRYSTAL	1	1.400
21	350006	EARPHONE JACK 2.5MM	1	0.200
22	350007	2.5x5.5MM FEMALE JACK	1	0.130
23	400024	40 PIN IC SOCKET	1	0.400
24	400027	6 PIN TELEPHONE SOCKET	1	2.000

cont'd 2

MODEL : FORTE (864)

Page 2 cont'd

ITEM	PART NO	DESCRIPTION	QTY	UNIT PRC (US$)
25	400038	28 PIN IC SOCKET	2	0.400
26	410030	SILICON RUBBER	3	0.100
27	450035	NICAD BATTERY 2.4V	1	2.300
28	530047	HEAT SINK	1	0.220
29		BARE WIRE 12MM 5-12-5	108	0.003
30		COIL 47UF	1	0.100
31		CER. CAP 30PF 50V	4	0.050
32		CER. CAP 100PF 50V	1	0.050
33		CER. CAP 0.001UF 50V	2	0.050
34		CER. CAP 0.005UF 50V	2	0.050
35		E. CAP 1UF/10V	1	0.010
36		E. CAP 10UF/10V	3	0.010
37		E. CAP 22UF/25V	4	0.010
38		E. CAP 100UF/16V	1	0.010
39		E. CAP 470UF/16V	1	0.020
40		E. CAP 1000UF/16V	1	0.500
41		JUMPER WIRE #28 220MM	2	0.003
42		JUMPER WIRE #28 300MM	2	0.003
43		JUMPER WIRE #28 380MM	2	0.003
44		METAL CLAMP 46x5.5MM	1	0.200
45		METAL CLAMP 86x5.5MM	1	0.200
46		NUT M3x0.5	1	0.003
47		RECTIFIER DIODE 1N4001	4	0.020
48		SWITCHING DIODE 1N4148	10	0.020
49		ZENER DIODE 4.3V	1	0.010
50		ZENER DIODE 12V	2	0.050

cont'd 3

MODEL : FORTE (864)

ITEM	PART NO	DESCRIPTION	QTY	UNIT PRC (US$)
51		RESISTOR 22 OHM 1/4W 5%	1	0.005
52		RESISTOR 120 OHM 1/4W 5%	8	0.005
53		RESISTOR 150 OHM 1/4W 5%	1	0.005
54		RESISTOR 220 OHM 1/4W 5%	2	0.005
55		RESISTOR 330 OHM 1/4W 5%	1	0.005
56		RESISTOR 470 OHM 1/4W 5%	3	0.005
57		RESISTOR 1K OHM 1/4W 5%	4	0.005
58		RESISTOR 1.2K OHM 1/4W 5%	1	0.005
59		RESISTOR 1.5K OHM 1/4W 5%	3	0.005
60		RESISTOR 2.2K OHM 1/4W 5%	1	0.005
61		RESISTOR 2.7K OHM 1/4W 5%	4	0.005
62		RESISTOR 3.3K OHM 1/4W 5%	8	0.005
63		RESISTOR 4.7K OHM 1/4W 5%	13	0.005
64		RESISTOR 10K OHM 1/4W 5%	16	0.005
65		RESISTOR 15K OHM 1/4W 5%	1	0.005
66		RESISTOR 33K OHM 1/4W 5%	1	0.005
67		RESISTOR 10M OHM 1/4W 5%	1	0.005
68		SCREW M3x8x0.5	1	0.003
69		TRANSISTOR 9012 or EQV.	3	0.100
70		TRANSISTOR 9013 or EQV.	2	0.100
71		TRANSISTOR 9014 or EQV.	13	0.080
72		TRANSISTOR 9015 or EQV.	2	0.100

cont'd 4

MODEL : FORTE (864)

B) ASSEMBLY : LCD PCB

ITEM	PART NO	DESCRIPTION	QTY	UNIT PRC (US$)
1	060006	LCD DISPLAY	1	2.000
2	--	DISPLAY POLARIZER	1	0.500
3	020005	HLCD DRIVER 0538	1	3.800
4	100056	LCD PCB	1	1.500
5	410031	ZEBRA CONNECTOR	1	0.400
6	530104	LCD MOUNTING BRACKET	1	0.150
7		FOAM PAD 50x5x3MM	1	0.050
8		LCD MODULE MTG PLATE	1	0.200
9		5 PIN CONNECTING ARRAY	1	0.100

C) ASSEMBLY : PRINTER CABLE

ITEM	PART NO	DESCRIPTION	QTY	UNIT PRC (US$)
1	100046	PCB - PRINTER CABLE	1	0.200
2	410028	PRINTER CABLE ASSEMBLY	1	2.000
3	600144	TOP HOUSING - PRINTER CABLE	1	0.100
4	600145	BOTTOM HOUSING - PRINTER CABLE	1	0.100
5		POLYBAG	1	0.020
6		SCREW 2.6x10 (BLACK)	2	0.003

cont'd 5

MODEL : FORTE (864)

D) ASSEMBLY : HOUSING

ITEM	PART NO	DESCRIPTION	QTY	UNIT PRC (US$)
1	110015	MEMBRANE KEYBOARD	1	4.200
2	110016	MEMBRANE CHESSBOARD	1	8.500
3	530052	BATTERY CONTACT (+)	1	0.050
4	530053	BATTERY CONTACT (-)	1	0.050
5	530056	BATTERY TERMINAL	1	0.050
6	600159	BATTERY DOOR	1	0.100
7	600185	TOP HOUSING	1	2.800
8	600186	BOTTOM HOUSING	1	1.500
9	600187	LENS	1	0.250
10	800016	OVERLAY CHESSBOARD	1	2.500
11	800019	OVERLAY KEYBOARD	1	1.000
12		ANTI-DUST FELT 22x38	1	0.020
13		ANTI-DUST FELT 90x90	1	0.020
14		ANTI-DUST FELT 113x52	1	0.020
15		BACK LABEL W/SERIAL NO.	1	0.060
16		BATTERY STRIP	1	0.060
17		FOAM PAD 10x10x1.5	1	0.020
18		METAL INLAY	1	0.500
19		PVC COVER - PRINTER SLOT	1	0.150
20		RESET SWITCH FELT	1	0.020
21		RUBBER FEET	4	0.060
22		SCREW P2.6x8	5	0.003
23		SCREW P3x12	4	0.003
24		SCREW P3x18	7	0.003
25		27MM TRANSDUCER	1	0.160

cont'd 6

MODEL : FORTE (864)

Page 6 cont'd

E) ASSEMBLY : PACKING

ITEM	PART NO	DESCRIPTION	QTY	UNIT PRC (US$)
1	520003	POUCH	1	0.650
2	600168	CHESS PCS - LIGHT YELLOW	1	1.500
3	600169	CHESS PCS - DARK BROWN	1	1.500
4	970145	INSTRUCTION MANUAL	1	0.250
5	990098	GIFT BOX	1	1.500
6		BUBBLE BAG	1	0.120
7		CARTON SLEEVE (CHESS PCS)	1	0.090
8		CARTON SLEEVE - LEFT	1	0.060
9		CARTON SLEEVE - RIGHT	1	0.060
10		POLYBAG	1	0.020
11		SHIPPING CARTON	1/5	1.200

****

RICOH

No. 84-01 4-1-1984

Microelectronic Specification

RP65C02

CMOS 8-bit MICROCOMPUTER SYSTEM

■ GENERAL DESCRIPTION

The RP65C02 is 8-bit CMOS CPU. It has the instruction set and pins which are fully compatible with the NMOS 6502 CPU, and in addition, with 59 new instructions. It is provided with the features of the CMOS such as the powerdown, standby mode, etc.

■ FEATURES

- Single power supply 5V operation
- CMOS 3μ silicon gate process
- Low power dissipation
- 8-bit bi-directional data bus, parallel processing
- 68-type 210 instructions
- Powerful 13-type addressing modes
- Programmable stack pointer
- Maskable interrupt and non-maskable interrupt
- 6-type internal registers
- Enable to connect the external memory with up to 64Kbytes
- Reference clock 1~4 MHz
- Executable single-instruction
- Computable decimal and binary
- Bus compatible with M6800
- Pin compatible with ROCKWELL R65C02

■ APPLICATIONS

- Hand-held computer, etc.

■ PIN CONFIGURATION (Top view)

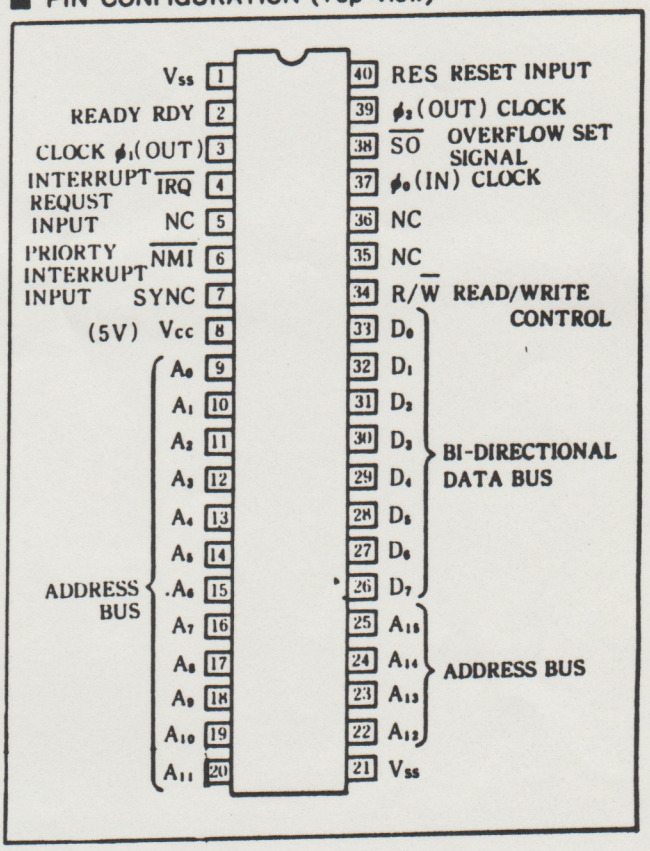

■ BLOCK DIAGRAM

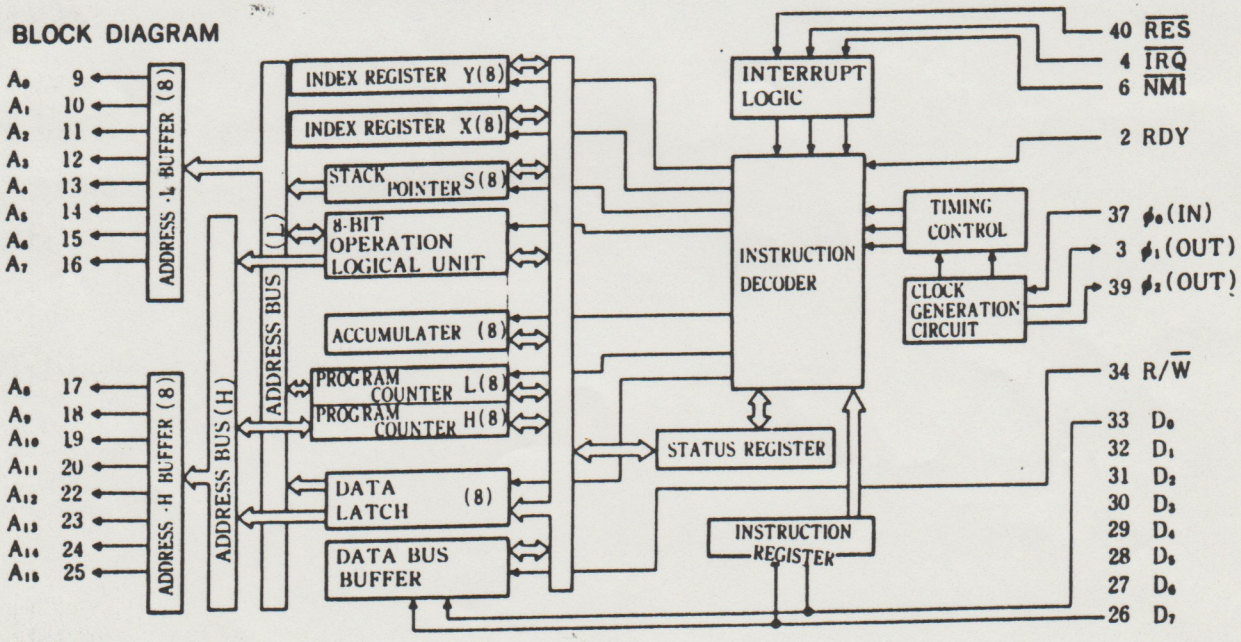

● AC ELECTRICAL CHARACTERISTICS (V_{CC} = 5.0±5%, Ta = 0℃ ~ 70℃, load 130pF)

Symbol	Parameters	1 MHz		2 MHz		3 MHz		4 MHz		Unit
		Min	Max	Min	Max	Min	Max	Min	Max	
t_{CYC}	Cycle time	1000		500		333		250		ns
$PW_{\phi 2L}$	ϕ_2 "Low" Clock Pulse Width	430	5000	210	5000	150	5000	100	5000	ns
$PW_{\phi 2H}$	ϕ_2 "High" Clock Pulse Width	450		220		160		110		ns
t_R, t_F	Clock rising time, Clock Falling Time		25		15		12		10	ns
t_{ADS}	Address Delay Time		225		140		110		90	ns
t_{HA}	Address Hold Time	20		20		15		15		ns
t_{HRW}	R/$\overline{W}$ Hold Time	30		30		30		30		ns
t_{DSU}	Read Data Setup Time	100		50		50		50		ns
t_{HR}	Read Data Hold Time	10		10		10		10		ns
t_{HW}	Write Data Hold Time	30		30		30		30		ns
t_{ACC}	Read Access Time	695		340		254		168		ns
t_{RWS}	Processor Control Setup Time (RDY, S.O, $\overline{IRQ}$, $\overline{NMI}$, $\overline{RES}$)	200		110		80		60		ns
t_{WDS}	Write Data Delay Time		175		100		75		70	ns
t_{DLY}	Delay Time ϕ_0 to ϕ_2		100		100		100		100	ns
t_{DLY1}	Delay Time ϕ_1 to ϕ_2		50		50		50		50	ns

■ TIMING CHART

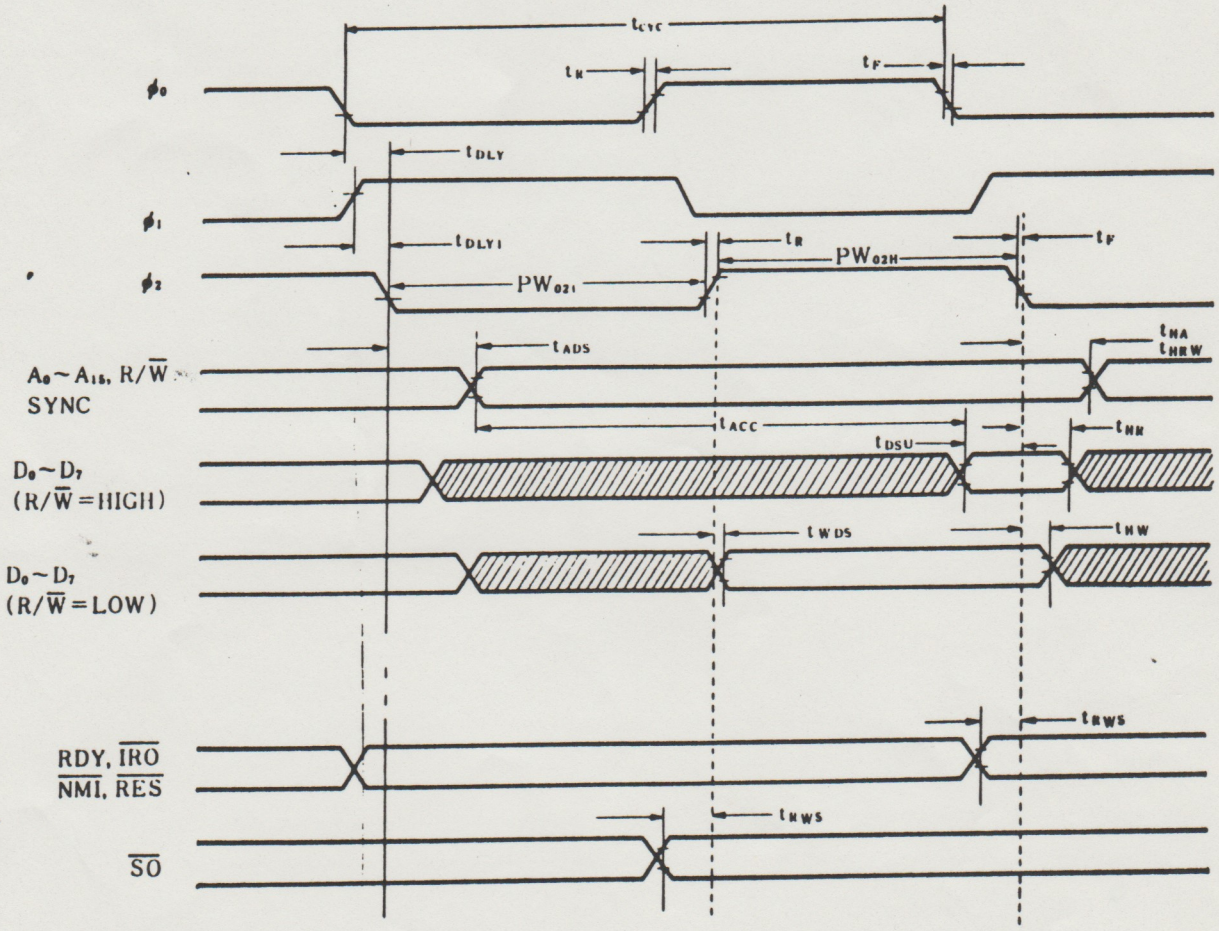

※ "H"2.4V, "L"0.4V

■ ABSOLUTE MAXIMUM RATINGS

Symbol	Parameters	Limits	Unit
V_{CC}	Supply Voltage	−30 ~ +7.0	V
V_I	Input Voltage	−0.3 ~ +7.0	V
P_d	Power Dissipation	500	mW
T_{opr}	Operating Ambient Temperature	0 ~ +70	℃
T_{stg}	Storage Temperature	−40 ~ +125	℃

■ ELECTRICAL CHARACTERISTICS

● DC ELECTRICAL CHARACTERISTICS (V_{CC} = 5.0 ± 5%, V_{SS} = 0V, Ta = 0 ~ +70℃)

Symbol	Parameters		Measuring Conditions	Specified Value Min	Typ	Max	Unit
V_{IH}	Input High Voltage	ϕ_0(in)		2.4		V_{CC}+0.3	V
		Logic		2.0		V_{CC}+0.3	
V_{IL}	Input Low Voltage	ϕ_0(in)		−0.3		0.4	V
		Logic		−0.3		0.8	
I_{IL}	Input Leak Current	Logic	V_{CC} = 5.25V	−30		+10	μA
		ϕ_0(in)	V_I = 0 ~ 5.25V	−10		+10	
I_{OL}	Output Floating Leakage Current Data Line		V_I = 0.4 ~ 2.4V	−10		+10	μA
V_{OH}	Output High Voltage ϕ_1, ϕ_2, SYNC, D_0~D_7, A_0~A_{15}, R/$\overline{W}$		I_{LOAD} = −100μA V_{CC} = 4.75V	2.4			V
V_{OL}	Output Low Voltage ϕ_1, ϕ_2, SYNC, D_0~D_7, A_0~A_{15}, R/$\overline{W}$		I_{LOAD} = 1.6mA V_{CC} = 4.75V			0.4	V
P_d	Power Disspation (no-load)		I_C = 0MHz (standby)		0.1	0.15	mW
			= 1MHz		20	30	mW
			= 2MHz		40	60	mW
			= 3MHz		60	90	mW
			= 4MHz		80	120	mW
			Low Power (RDY = 0)		10	15	mW/MHz
C	Input Capacitance Logic					10	pF
	D_0~D_7					10	
	SYNC, A_0~A_{15}, R/$\overline{W}$		V_I = 0V			10	
	ϕ_0(in)		f = 1MHz			10	
	ϕ_1					30	
	ϕ_2					50	

Note : $\overline{IRQ}$, $\overline{NMI}$ need pull-up resistor.