MK 12 TRAINER

Saitek™

Doc. No. : ST11C-PG-005

Rev. : 0

Date : 13 May, 1991

MK.12 TRAINER GENERAL PRODUCT SPECIFICATIONS

A.	Battery Requirement	: 1.5V (size AA or AM-3) X 4 pcs. Alkaline type recommended
B.	Operating Voltage	: 4.4 - 6.6 Volt
	Current Consumption	: a) Normal mode at V.Batt = 6.0V with two LEDs on 5mA typical 10mA max. b) Memory mode at V.Batt = 6.0V 5uA typical 30uA max
D.	Power Consumption	: 30mW typical 60mW max
E.	System Clock Frequency	: 1.7MHz +/- 15% (V.Batt = 6.0V)

PREPARED BY : BILL LO

APPROVED BY :

FILE:\ED#01\ST11C

Dist. : QAM. ASSEMBLER (C).

ORIGINAL

REVISION			
DATE	DESCRIPTION	ECN NO.	REV. NO.

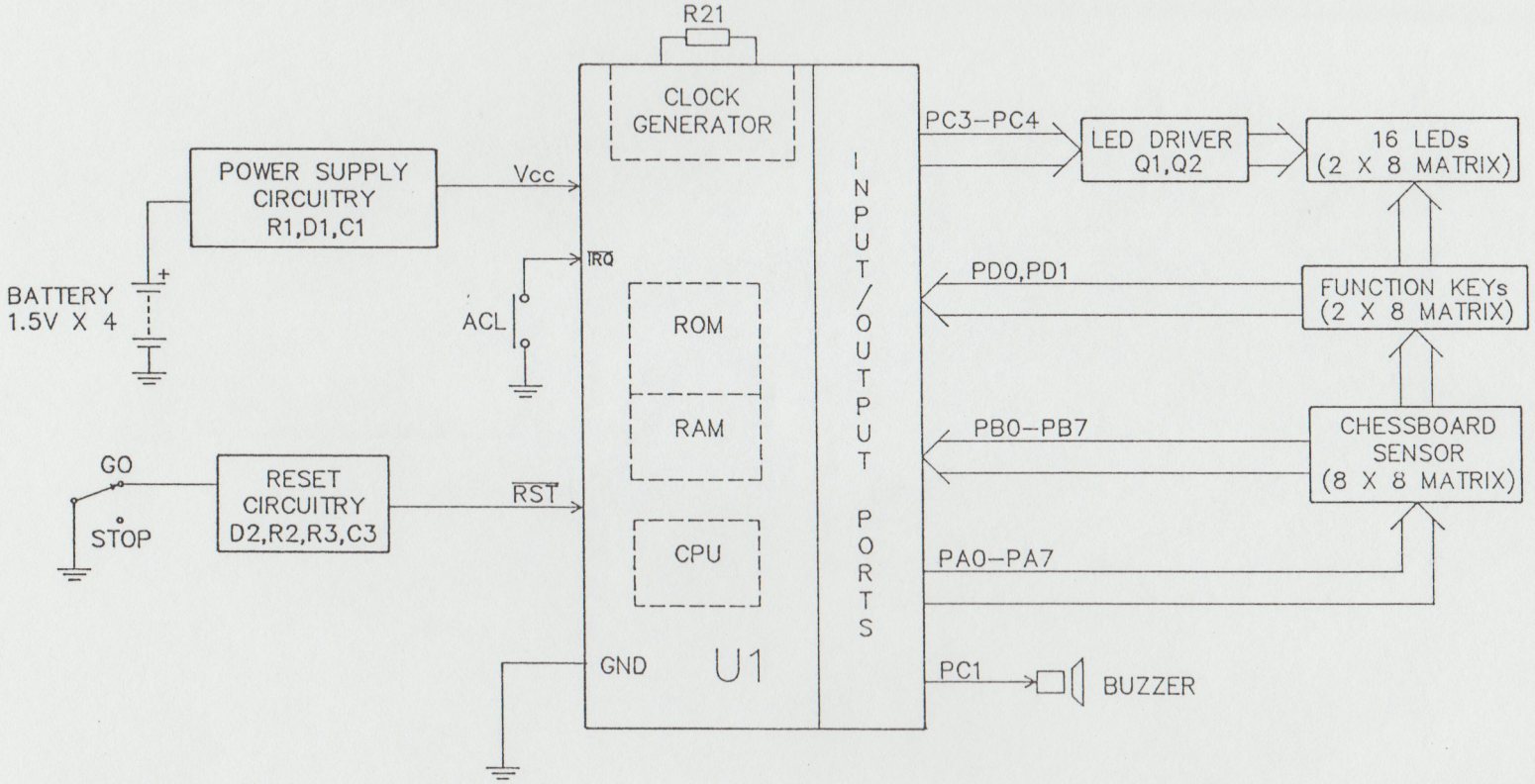

APPROVALS	DATE	Saitek Ltd.	
DRAWN	5/12/91	BLOCK DIAGRAM	
BDD1/2	6/12/91	TITLE: MK12 TRAINER	
E.D.	6.12.91	164D	
Q.A.	6.12.91	DWG. NO. ST11C – PE – 009	REV. 0

PROJECT : MK.12 TRAINER (ST11C)

Doc.No. : ST11C-PS-006

Rev. : 0

Date : 13 May, 1991

ADJUSTMENT PROCEDURE

OBJECT : To adjust system clock frequency.

EQUIPMENT NEEDED : Frequency counter or Oscilloscope capable of frequency measurement up to 10MHz.

PROCEDURE :

1. Disassemble unit by removing screws (5) on cabinet base.

2. Power on unit (V.Batt = 6.0V)

3. Place probe of counter/scope at pin 38 of U1. If frequency measured is out of specified range (1.45 - 1.95 MHz), add/replace R21 (S.O.T) until counter/scope reading is within specification.

   (Remarks : The input impedance of the probe may influence the system clock frequency during the measurement. A CMOS buffer gate should be added).

4. Reassemble unit.

PREPARED BY : _____ BILL LO

APPROVED BY : _____

DIST : QAM, ASSEMBLER [C]

FILE:\ED#01\ST11C

PROJECT : ST11C 31 October,91

TROUBLE SHOOTING GUIDE

SYMPTOMS			HINTS FOR TROUBLE SHOOTING
No response after pressing 'GO/STOP'		i) ii) iii) iv) v) vi)	Check the 4 batteries level is between (5.2-6.8)v. Check R1 is functionally good. Check C1 is functionally good. Check ACL switch is not short to gnd. Check U1 pin 38/39 is oscillating. Check 'GO/STOP'switch is functionally good.
LED does not turn on		i) ii) iii) iv) v)	Check for no broken PCB traces. Check the LED is functionally good. Check Q1/Q2 are functionally good. Check R9/R10 are functionally good. Check U1 pin 4-pin 11 & pin 24/25 is functionally good.
LED does not turn off		i) ii)	Check for no short circuit. Check U1 pin 4-pin 11 & pin 24/25 is functionally good.
No sound		i) ii) iii)	Check for no broken wire. Check beeper, D3/D4 functionally good. Check U1 pin 27 is outputting a train of pulse when the time beep sound should be emitted.
Improper response to function key and chessboard		i) ii) iii) iv)	Check no broken trace on PCB or sensor PCB. Check no dust or oxide on PCB or sensor PCB. Check U1, pin4 - pin 30 are functionally good. check R11-R20 are functionally good.
No Memory function		i) ii)	Check Low battery level. Check U1.
Excessive current		i) ii) iii) iv)	Check C1 does not leak current. Check no short circuit. Check U1 pin 28 is at high level. Check 'GO/STOP' key is functionally good.
Illegal move		i) ii) iii)	Check low battery level Check U1 pin 38/39 is oscillating at a frequency 2MHz +/- 15%. Check U1 is functionally good.

FILENAME : \ED23\TSCST11C

Ckng

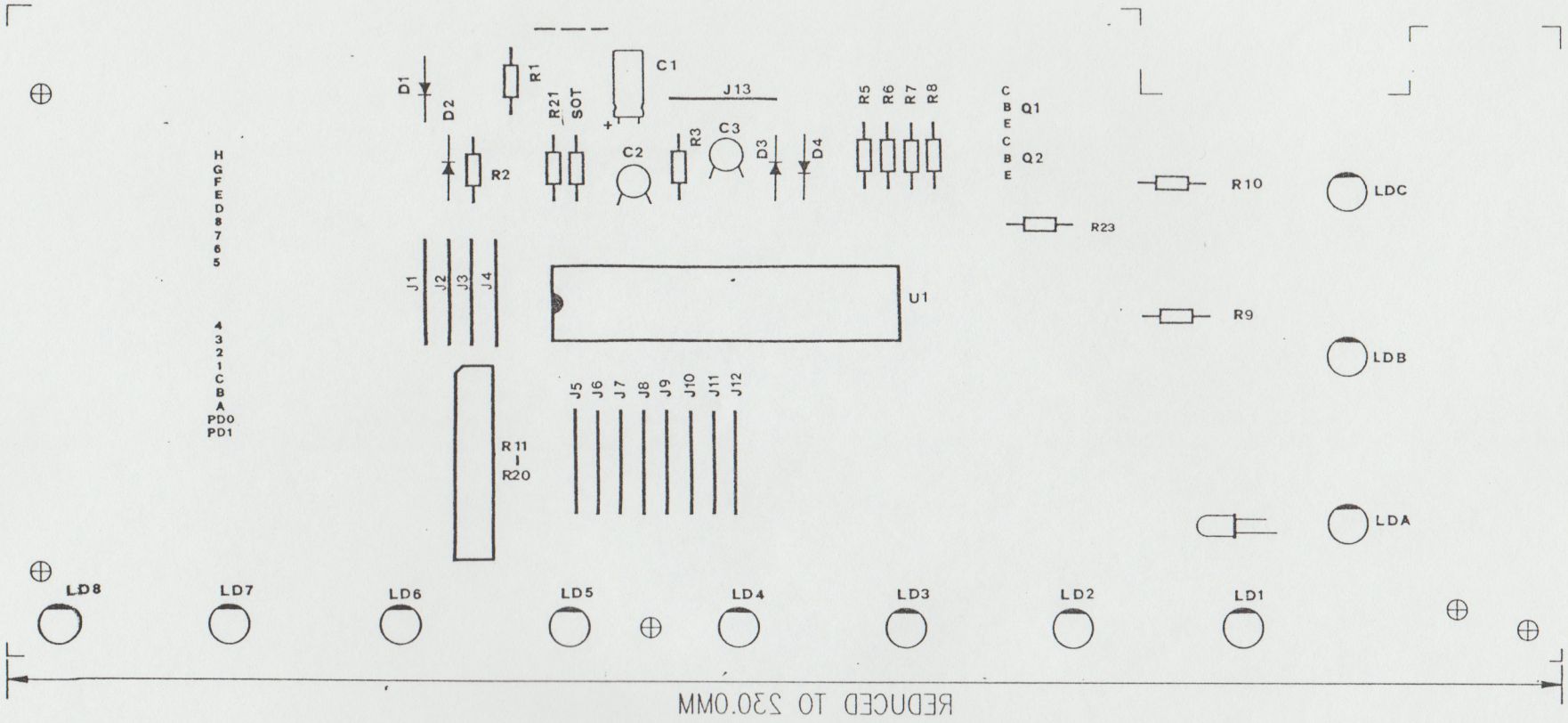

			Year 1999/21					3/1	TY		Rev		
3RD ANGLE PROJECTION	SIGNATURE		DATE	REV	ITEM	WAS	IS	DATE	DRAWN	CHECK	ED	QA	RD
						DESCRIPTION OF CHANGE					APPROVED		
TOLERANCES	DRAWN BY:	TY	7-11-99	Saitek		TITLE: Logic PCB Component layout							
DIM. : ANGLE:	CHECK BY:		12-11-99										
SCALE: 2:1 UNIT: mm	ENGRG AUTH		12-11-99	DWG. NO.: ST2D-PE-002CL				PROJECT: ST2D					
QUANTITY :	Q.A. APPD.		12-11-99	P/N. : ST11C									
SHEET OF	R.D. APPD.		12-11-99	MATERIAL				FINISH					

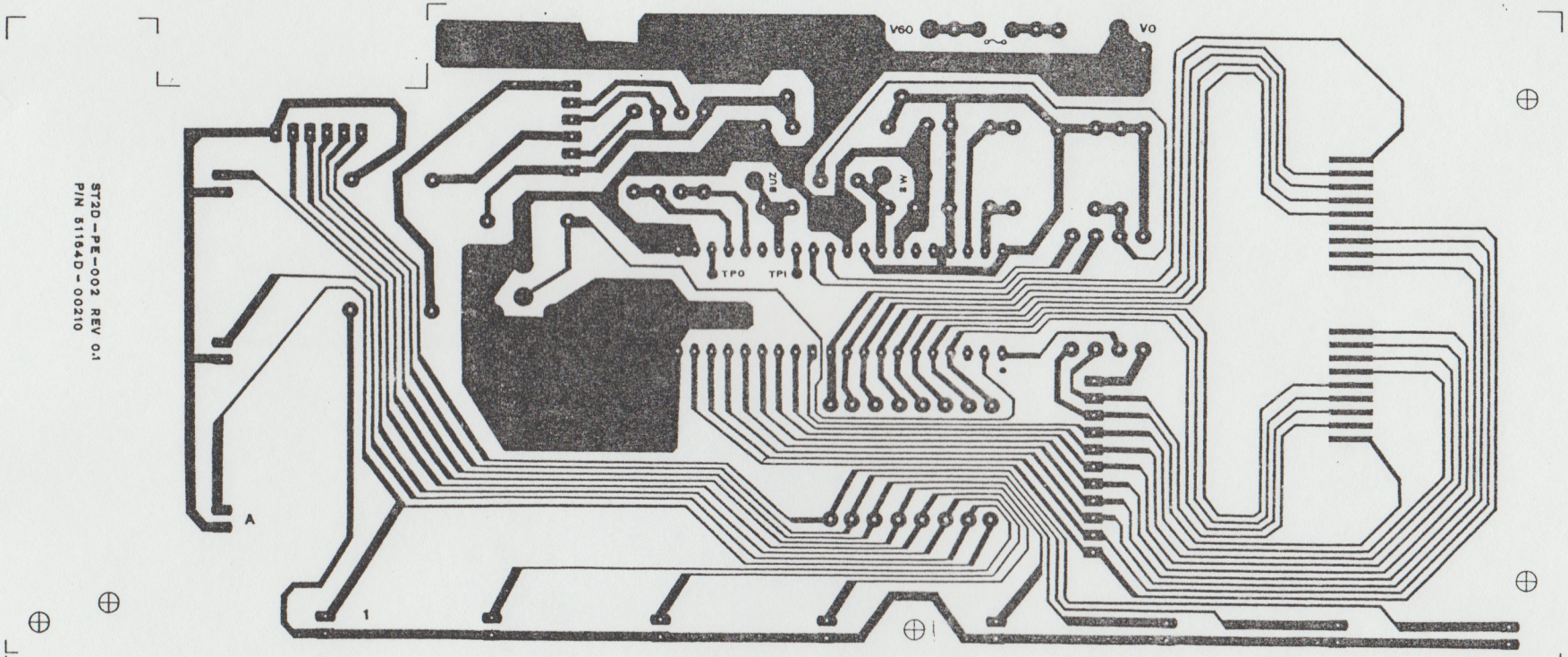

ST2D-PE-002 REV 0.1
P/N 51164D-00210

REDUCED TO 230.0MM

3RD ANGLE PROJECTION	SIGNATURE		DATE
TOLERANCES	DRAWN BY:	TY	7-11-90
DIM : ANGLE:	CHECK BY:		12-11-90
SCALE: 2:1 UNIT: mm	ENGRG AUTH		12-11-90
QUANTITY :	Q.A. APPD.		13-8-93

REV	ITEM	WAS	IS	DATE	DRAWN	CHECK	ED	QA	RD
		DESCRIPTION OF CHANGE					APPROVED		
0.1		Circuit change for EN71		3/11	TY				

Saitek

TITLE: Logic PCB Layout (Solder side)

DWG. NO.: ST2D-PE-0023S

PROJECT: ST2D

P/N.: 15.1.1.6.4.D.1.0.0.7.1.0.1

REDUCED TO 230.0MM

3RD ANGLE PROJECTION	SIGNATURE		DATE
TOLERANCES	DRAWN BY:	TY	2.1.90
DIM. : ANGLE:	CHECK BY:		
SCALE: 2:1 UNIT: mm	ENGRG AUTH	RW	12.11.90
QUANTITY :	Q.A. APPD.	VinKy	12.11.90
SHEET OF	R.D. APPD		

Year 1991 .1 3/1 TY

REV.	ITEM	WAS / IS DESCRIPTION OF CHANGE	DATE	DRAWN	CHECK	ED	QA	RD
						APPROVED		

Saitek

TITLE: Logic PCB Solder Mask

DWG. NO. STLD-P5-0022M PROJECT: ST2D

P/N. :

MATERIAL FINISH

ORIGINAL

REVISION			
DATE	DESCRIPTION	ECN NO.	REV. NO.
18/11/91	1) ADD R24	91042	1
	2) PD5 CONNECT TO VCC	91061	

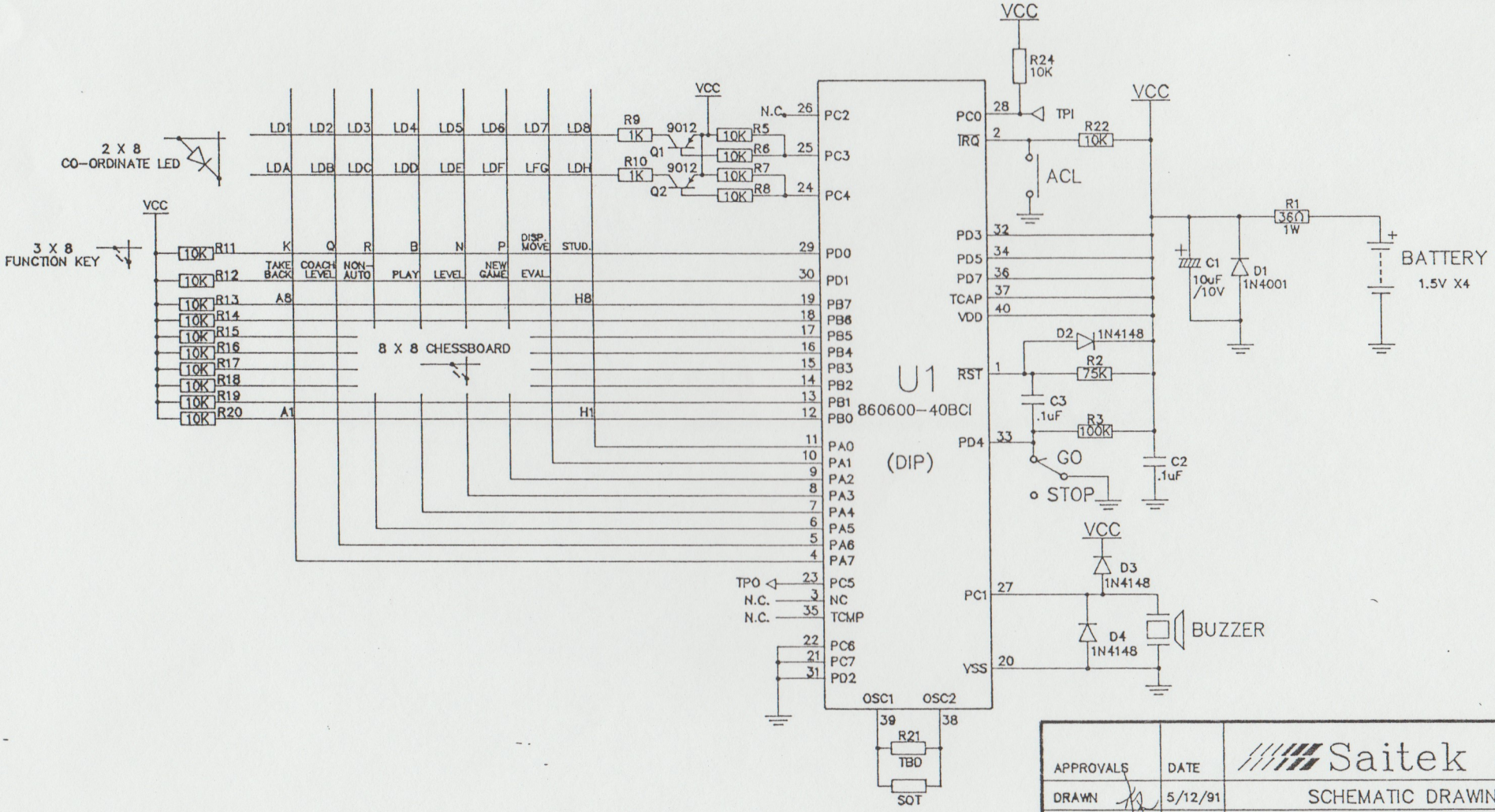

APPROVALS	DATE	Saitek Ltd.	
DRAWN	5/12/91	SCHEMATIC DRAWING	
B.D.D.1/2	6/12/91	TITLE:	
E.D.	6.12.91	1640	MK12 TRAINER
Q.A.	6.12.91	DWG. NO. ST11C (ST2D) – PE – 001	REV. 1

SAITEK

BILL OF MATERIALS

PROJECT : ST11C (K12 TRAINER)

ART.NO. : 164D

SHIP VER. : EV

REVISION : 5.2 FILENAME : \ED#P02B\ST11C

REVISION HISTORY

REVISION	DATE	BY	DESCRIPTION OF CHANGES
4	30.01.92	LEON WONG	To increase # of level per ECN91061, effective 03.03.92.
4.1	07.04.92	C.M. NG	Add EP & SCI options assembly for HK.
4.2	24.04.92	C.M. NG	Add options assembly DK.
4.2	24.04.92	C.M. NG	Add options assembly.(DHS)
5	05.08.92	LEON WONG	Add sticker on box P/N 36164D-01100.
5.1	09.10.92	LEON WONG	Delete sticker P/N 36164D-01100, correct giftbox P/N 42164D-61201 to P/N 42164D-61210.
5.2	26.02.93	BILL LO	Update plastic cost and manual.

RELATED DOCUMENTS

	REV
Schematic dwg : ST11C-PE-001	1

Prepared BY : _____ Bill Lo

Approved by : _____ EM

Distribution :
+1.00 [ ] BDD1, MMM, CM ; QAM, Store, SEE, Assembler [TL, CTL, SEA]
+0.10 [X] MMM ; QAM, Store, SEE, Assembler [~~TL~~, SEA]
+0.01 [ ] BDD1, MMM

Date issue : 1 MAR 1993

CHG MOD: NW=new component; X =desc/PN/Ref changed +/-=cost up/down; C/NC=consigned/non-consigned +/-Q=QTY up/down

99164D-11EV - ST11C,EV, MK12 TRAINER Rev : 5

Level	Item	Chg	Stock Code	Rev	Cons	Description	Qty Per	Reference
1			98164D-00000	2		UNIT ASSEMBLY,FOR ST11C	1.000	
2			91164D-00001	3		GUT ASSEMBLY - LOGIC	1.000	
3	1		51164D-00212			PCB,LOGIC,S.S.,1.6MM PAPER PHENOLIC	1.000	
3	2		860600-40BCI		RC	MICROPROCESSOR,SX11,B12I,DIP	1.000	U1
3	3		660001-11003		RC	LED,RED,DOME,D=3MM,TOSHIBA,TLR124	11.000	
3	4		611035-32111		RC	RESISTOR,ARRAY C-FILM,10KX10,5%,1/4W,11	1.000	R11-R20
3	5		611025-31102			RESISTOR,FIXED C-FILM,1K,5%,1/4W	2.000	R9,R10
3	6		611035-31102			RESISTOR,FIXED C-FILM,10K,5%,1/4W	6.000	R5-R8,R22,R24
3	7		617535-31102			RESISTOR,FIXED C-FILM,75K,5%,1/4W	1.000	R2
3	8		611045-31102			RESISTOR,FIXED C-FILM,100K,5%,1/4W	1.000	R3
3	9		617525-31102			RESISTOR,FIXED C-FILM,7K5,5%,1/4W	1.000	R21(THOMSON SOT
3	10		613635-31102			RESISTOR,FIXED C-FILM,36K,5%,1/4W	.000	R21(HARRIS SOT)
3	11		613005-41102			RESISTOR,FIXED C-FILM,30,5%,1/2W	1.000	R1
3	12		62104M-01611			CAPACITOR,C-CAP,0.1UF,+/-20%,16V	2.000	C2,C3
3	13		62106Z-01616			CAPACITOR,E-CAP,10UF,+80-20%,16V,L.L	1.000	C1
3	14		654001-20000			DIODE,RECTIFIER,1N4001	1.000	D1
3	15		654148-10000			DIODE,SWITCHING,1N4148	3.000	D2-D4
3	16		670290-12GB0		RC	TRANSISTOR,PNP,9012G,CENTRE B	2.000	Q1,Q2
3	17		000010-00100			ACL,RESET CONTACT,D=10MM,CR STEEL	1.000	
3	18		000051-70155			JUMPER,L=17MM,LL=15MM,D=0.5MM	13.000	J1-J13
2			91164B-00002	1		GUTS ASSEMBLY - LED	1.000	
3	19		512510-0242E			PCB,LED,S.S,PAPER PHENOLIC	1.000	
3	20		660001-11003		RC	LED,RED,DOME,D=3MM,TOSHIBA,TLR124	5.000	
3	21		000030-00030			CONN ARRAY,N=6,L=20MM,P=2.54MM,E=3.5MM	1.000	
2			96164D-00000	1		CASING & PACKING ASSEMBLY,FOR ST11C	1.000	
3	22		000130-00270			BUZZER,D=27MM	1.000	
3	23		52164B-00020			SWITCH,2P2T,FOR ST2/ST2B,PIC#SS22F25G7	1.000	
3	24		000021-00010			RUBBER FOOT,3M,D12X3.2MM,ADHESIVE	4.000	
3	25		000062-46043			STRAND WIRE,RED,L=460MM,E=3.5MM,AWG28	1.000	B+ TO V60
3	26		000063-25043			STRAND WIRE,ORANGE,L=250MM,E=3.5MM,AWG28	1.000	SW TO SW
3	27		000067-25043			STRAND WIRE,PURPLE,L=250MM,E=3.5MM,AWG28	1.000	SW TO SW
3	28		000060-32043			STRAND WIRE,BLACK,L=320MM,E=3.5MM,AWG28	1.000	B- TO V0
3	29		000068-15043			STRAND WIRE,GREY,L=150MM,E=3.5MM,AWG28	2.000	TO BUZZER
3	30		215120-02502		RC	PLASTIC,SENSOR CLAMP LARGE,PC,CLEAR	1.000	
3	31		214210-03500		RC	PLASTIC,LOCK PIN,NYLON 66,WHITE	1.000	
3	32		250000-00150		RC	RUBBER ROD,48X2.9X2.8MM,COMPRESS KE951U	1.000	
3	33		351640-01000		RC	INLAY,FOR GO/STOP SW.,PVC,BLACK,ST2B	1.000	
3	34		222510-00500		RC	METAL,B-CONT,"+",PH.BRONZE,NI-PLT,ST3	1.000	
3	35		222510-03600		RC	METAL,B-CONT,"-",PH.BRONZE,NI-PLT,ST3	1.000	
3	36		220000-00601		RC	METAL,PLATE,200X200,W/D-TAPE,YO1C	1.000	
3	37		000080-00050			WASHER,FIBRE,ID=3MM,OD=8MM,T=0.8MM	1.000	FOR SEN. TONGUE
3	38		000073-21434			SCREW,S/T,+PAN,M2.6X8MM,A	7.000	FOR PCB
3	39		000073-21424			SCREW,S/T,+PAN,M2.6X6MM,A	1.000	FOR SEN. TONGUE
3	40		000073-12434			SCREW,S/T,+BIND,M2.6X8MM,BT	5.000	CAB
3	41		000071-20104			SCREW,M/S,+PAN,M2.0XP0.4X4.0MM,FLAT	2.000	SWITCH
3	42		31164D-00300		RC	SENSOR,CHESSBOARD,COMBO,ST11C	1.000	
3	43		32164B-00600		RC	OVERLAY,FOR ST2B,CHESSBOARD,COMBO	1.000	
3	44		34164C-00400		RC	NAME PLATE,LEXAN,KASPAROV,SILK SCREEN	1.000	

SAITEK

PRODUCT COSTING - SAITEK BOM FORMAT

Run :
Prog:

99164D-11EV - ST11C,EV, MK12 TRAINER

Rev : 5

Level	Item	Chg	Stock Code	Rev	Cons	Description	Qty Per	Reference
3	45		462910-10600		RC	ACCESSORY,POUCH,FOR SA9 CHESSMEN	1.000	
3	46		360000-00200			LABEL,FOR SERIAL NO. ADHESIVE	1.000	
3	47		370000-XXXXX		RC	LABEL,COMMON,CUSTOMER LABELS	1.000	
3	48		451640-01601			POLYFOAM SET,END CAP 2PCS,FOR ST2	1.000	
3	49		000122-40180			POLYBAG,240X180X0.045MM	1.000	FOR MANUAL
3	50		000123-60280			POLYBAG,360X280X0.045MM	1.000	FOR UNIT
3	51		45164B-00900			CARTON,FOR ST2B,10PCS/CTN	.100	
3			242070-04001	1		CHESSMEN SET,ST8B,16X2,027+028,RUB.MAG	1.000	
4	52	C-	242050-02811		RC	CHESSMEN,YO1C,16,DARK GREY,RUB MAGNET	1.000	
4	53	C-	242050-02711		RC	CHESSMEN,YO1C,16,LIGHT GREY,RUB MAGNET	1.000	
3			95164B-00010	2		CABINET SET,FOR ST2B (CHINA)	1.000	
4	54		212510-00107		RC	PLASTIC,T.CAB.,HIPS,BLACK	1.000	
4	55	C-	212510-00413		RC	PLASTIC,B.CAB.,HIPS,BLACK,CN	1.000	
4	56	C-	212510-00200		RC	PLASTIC,BATT.LID,HIPS,BLACK	1.000	
1			97164D-10EV	3		OPTIONS ASSEMBLY,FOR ST11C.EV	1.000	
2	57	*	41164D-41102		RC	MANUAL,FOR ST11C.E/G/F/D,SWL	1.000	
2	58		42164D-61210		RC	GIFTBOX,FOR ST11C,E/G/F/D/S/I,SWL	1.000	
2	59		430016-01003		RC	LEAFLET,CONSUMER 1992,ENGLISH,SWL	1.000	
2	60		430004-51000		RC	CARD,WARRANTY,E/G/F/D/S,SWL,CHESS	1.000	
2	61		430002-01000		RC	LEAFLET,LET'S PLAY CHESS,E,SWL	1.000	
2	62		33164D-00400		RC	RATING PLATE,FOR ST11C,PVC,SWL,ALL,CN	1.000	
2	63		430032-01001		RC	BOOK,EASY STEPS TO WINNING CHESS,E,SWL	1.000	

PIN ASSIGNMENTS

40-PIN DUAL-IN-LINE PACKAGE

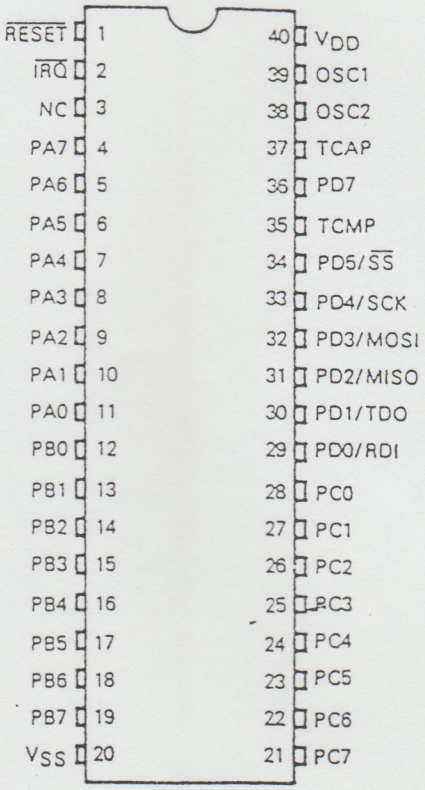

8. FUNCTIONAL TEST PROCEDURE FOR MK 12 TRAINER

Pre-set the GO/STOP switch to its STOP position, insert four AA size batteries to the battery compartment. Switch on the computer and then perform the following procedures. (Note: the Row 1 LED will come on after scanning of the LEDs (A1, B2, C3 ... H8) followed by a high-low tone. If not, slide the GO/STOP switch to its GO position, use a sharp object to press the ACL button once.)

Purpose	Procedure	Observation
1. Check Coach function (for 16 level version)	- Press LEVEL key 7 times	- Row3 to Row 8, Column A LEDs turned ON in turn after each press.
	- Press COACH key 3 times	- Column G, H, F LEDs turned On in turn.
	- Press NONAUTO key once	- Beep-Beep sound is emitted.
	- Press D2, D4, D7, D5, G1, F3, E7, E5, F3, E5, F8 and C5 squares in sequence	- The corresponding Row and Column LED will come on when you press the square.
	- Press NONAUTO key once	- Beep sound is emitted.
	- Press E5 and G6 squares	- The corresponding Row and Column LED will come on when you press the square. After a while, G8's LEDs are ON.
	- Press G8	- F6's (or E7's) LEDs are ON.
	- Press F6 (or E7)	- After a while, LED of square G6 is blinking (If LED A2 is blinking instead of G6, the program version is incorrect).

Purpose	Procedure	Observation
2. Reset unit	- Press ACL	- The Row 1 LED will come on after scanning of the LEDs (A1, B2, C3 ... H8) followed by a high-low tone.
3. Check LEVELS	- Press the LEVEL key 9 times if it is 8 level version.	- Row3-Row8-Row1-Row2 LEDs come on in turn after each press and then back to Row3 LED.
	- Press the LEVEL key 17 times if it is 16 level version.	- Row3-Row8-ColumnA-ColumnH-Row1-Row2 LEDs come on in turn after each press and then back to Row3 LED. (Note: Level 3 is the default level at power up)
4. Check MULTI-MOVE mode	- Press the NONAUTO key, and then press F2, F4, E7, E5, G2 and G4, "PLAY", D8 and H4 squares in sequence.	- The corresponding Row and Column LED will come on when you press the square. - Column G and H LEDs will flash with "1" LED on when H4 square is pressed.
5. Check MEMORY	- Switch the GO/STOP, switch to its STOP position, press the NEWGAME key and then re-switch the computer to its GO position	- All LEDs come off when the GO/STOP switch is at its STOP position. However, the Row1 LED come on and the Column G and H LEDs will flash again after switching the computer on.
	- Press TAKEBACK	- H4 LEDs turn on.
	- Press H4	- D8 LEDs turn on.
	- Press D8	- Row 8 LEDs turn on.

Purpose	Procedure	Observation
6 Check NEWGAME	- Press the NEWGAME key	- Only the "1" LED comes on.
7. Check STUDIES	- Press STUDIES	- Column H LED comes on then "1" LED comes on.
	- Press A5, E5	- Computer response immediately with a move F6-F7.
	- Press F6, F7	
8. Check SOUND LEVEL	- Press HELP key 3 times	- Column LEDs F, G, H light up in turn.

Remark : Before this step, the computer will beep whenever you press a key or square. After this step, no beep will be given for all keypress.

9. Check VERIFY	- Press KING key twice	- Column D and Row 4 LEDs come on, column F and Row 7 LEDs flash.

Remark : After step 7, the unit will beep whenever you press a key or square.

Purpose	Procedure	Observation
10. Check 64 chessboard	- Press the "ACL" key and hold down "PLAY" key while power up (ON)	- All LEDs will be scanned from A1, B2 ... H8.
		- LEDs 1, 3, 5, 8 come on. In addition, column A LED is on if it is 8 level version whereas "B" LED would be on instead if it is 16 level version.
	- Press the 64 squares sequentially	- The corresponding Row and Column LEDs will come on steadily.
	- Press the comand key from top to bottom	- A pair (one for Column and one for Row) of LEDs will flash for each press. KING A1 QUEEN B1 ROOK C1 BISHOP D1 KNIGHT E1 PAWN F1 NEWGAME A2 LEVEL B2 PLAY C2 TAKEBACK D2 NON AUTO E2 HELP F2 STUDIES A3 DISPLAY MOVE B3 EVALUATE C3
11. Finish	- Remove batteries. Switch the GO/STOP to its STOP position.	- All LEDs come off